ENGINEERING
TOMORROW

Data sheet

# SVL product range
## with butt-weld connection F

The new range of products for Industrial Refrigeration - SVL – is based on the successful modular platform concept from the ICF and ICV valves.

The SVL products with butt-weld connection F offer flexibility, simplicity and efficiency.

The valves are available from a parts program consisting of:
- Valve housing with butt-weld connection F in angle or straightway in different sizes.
- Five different types of function modules:
  Shut-off (SVA-S and SVA-L)
  Hand regulating (REG-S),
  Check & stop (SCA-X),
  Check (CHV-X)
  Strainer (FIA).

The function modules fit the same housing and they all have the same high specification. This makes selection, system design and mounting simple and trouble free.

**Features**

- One common housing specification makes it very easy to select the right valve for your application and timesaving switch between the functions.
- Approved for –60 °C to +150 °C (–76 °F to +302 °F) and up to 52 bar/754 psi (Refer pressure-temperature range chart on page 3 for more detail).
- Applicable for sub-critical $CO_2$ and heat pump systems (for selection of valves; please use the chart on page 3).
- The new packing gland features static and dynamic sealing components ensuring a unique, tight and secure seal throughout the operating conditions and covering all approved refrigerants and temperatures in the specification. As a result, the SVL products deliver a smooth opening and closing operation, along with very high reliability.
- The service kit setup makes selection of spare parts very easy.
- The SVL products with Buttweld connection F features coloured seal caps for easy identification of valve function.
  - Red caps for SVA-S/L shut-off valves
  - Yellow caps for REG-SA/SB regulating valves
  - Green caps for SCA-X check & stop valves and CHV-X check valves
  - Gray caps for FIA strainers.
- Matching colour of laser engraved aluminium name tag mounted on valve bonnet.
- Shared spare parts and modular design reduces complexity and stocking costs while allowing for fast and easy service.
- With multiple applications for a given spare part code number, spare parts inventories will be more flexible, and useful.
- If, for some reason, a component has been mounted in the wrong location in the system, it can be quickly solved by replacing the insert.
- SVL housing with connection type F is suitable for butt-weld with stainless steel pipes with small thicknesses (2 and 3mm).

## Contents


| | Page |
|---|---|
| **Pressure/Temperature range** | 3 |
| **Available SVL product range with butt-weld connection F** | 3 |
| **Shut-off valves SVA-S and SVA-L** | 4 |
| Features SVA-S and SVA-L | 4 |
| Technical data | 4 |
| Connections | 4 |
| Design | 5 |
| Material specification | 6 |
| Dimensions and weights | 12 |
| Ordering | 17 |
| **Check & stop valves, SCA-X / Check valves, CHV-X** | 19 |
| Features SCA-X and CHV-X | 19 |
| Technical data | 19 |
| Connections | 19 |
| Design | 20 |
| Computation and selection | 21 |
| Material specification | 23 |
| Application | 25 |
| Dimensions and weights | 26 |
| Ordering | 29 |
| **FIA strainers** | 31 |
| Features FIA | 31 |
| Technical data | 31 |
| Connections | 31 |
| Design | 32 |
| Selection of strainer size | 33 |
| Material specification | 35 |
| Dimensions and weights | 36 |
| Ordering | 39 |
| **Hand regulating valves REG-SA and REG-SB** | 41 |
| Features REG-SA and REG-SB | 41 |
| Technical data | 41 |
| Connections | 41 |
| Design | 42 |
| Computation and selection | 43 |
| Material specification | 51 |
| Dimensions and weights | 52 |
| Ordering | 54 |

**Pressure/Temperature range**

*Pressure/Temperature range chart for SVL product range with butt-weld connection F*

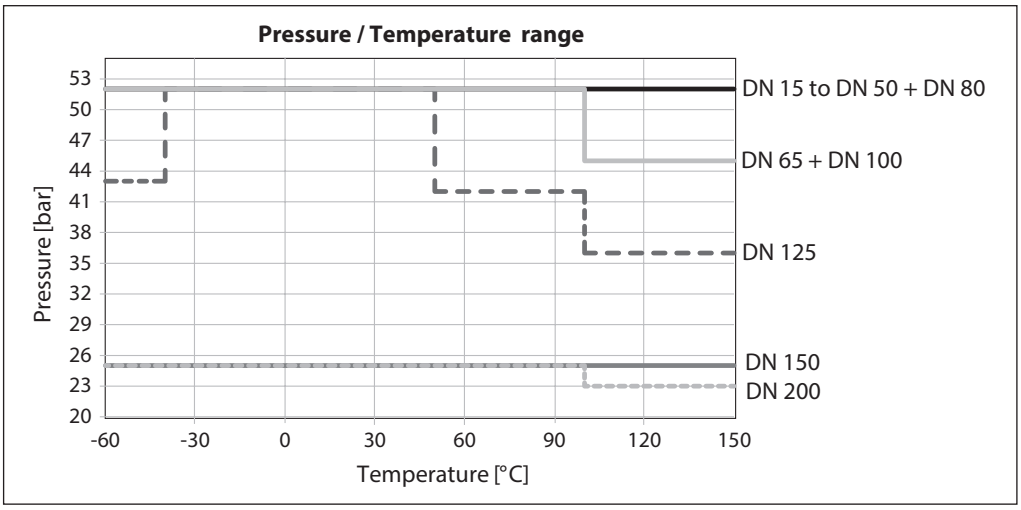


**For valve sizes DN 15 to DN 50 and DN 80:**
52 bar g (754 psi g) at -60°C to +150°C (-76°F to +302°F).

**For valve sizes DN 65 and DN100:**
52 bar g (754 psi g) at -60°C to +100°C (-76°F to +212°F),
45 bar g (652 psi g) at +100°C to +150°C (+212°F to +302°F).

**For valve size DN 125:**
52 bar g (754 psi g) at -40°C to +50°C (-40°F to +122°F)
43 bar g (623 psi g) at -60°C to -40°C (- 76°F to -40°F),
42 bar g (609 psi g) at +50°C to +100°C (+122°F to +212°F),
36 bar g (522 psi g) at +100°C to+150°C (+212°F to +302°F).

**For valve size DN 150:**
25 bar g (362 psi g) at -60°C to +150°C (-76°F to +302°F).

**For valve size DN 200:**
25 bar g (362 psi g) at -60°C to +100°C (-76°F to +212°F),
23 bar g (333 psi g) at +100°C to +150°C (+212°F to +302°F).

SVL housings with other connection types (DIN, ANSI, SOC and thread) are approved for a maximum working pressure of 52 bar g (754 psi g) at –60°C to +150°C (–76°F to +302°F) for all sizes.

The reduced pressure in some of the SVL housings with connection type F is caused by the welding onto stainless steel pipes with reduced pipe size.

**Available SVL products with butt-weld connection F**

| Size [DN] | SVA-S | | | | SVA-L | | | | SCA-X | CHV-X | FIA | | REG-SA | | REG-SB | |
|---|---|---|---|---|---|---|---|---|---|---|---|---|---|---|---|---|
| | ANG | | STR | | ANG | | STR | | ANG | ANG | ANG | STR | ANG | STR | ANG | STR |
| | H-WHEEL | CAP | H-WHEEL | CAP | H-WHEEL | CAP | H-WHEEL | CAP | CAP | CAP | | | CAP | CAP | CAP | CAP |
| **15** | X | X | X | X | X | X | X | X | X | X | X | X | X | X | X | X |
| **20** | X | X | X | X | X | X | X | X | X | X | X | X | X | X | X | X |
| **25** | X | X | X | X | X | X | X | X | X | X | X | X | X | X | X | X |
| **32** | X | X | X | X | X | X | X | X | X | X | X | X | X | X | X | X |
| **40** | X | X | X | X | X | X | X | X | X | X | X | X | X | X | X | X |
| **50** | X | X | X | X | | | | | X | X | X | X | | | X | |
| **65** | X | X | X | X | | | | | X | X | X | X | | | X | |
| **80** | X | X | X | X | | | | | X | X | X | X | | | | |
| **100** | X | X | X | X | | | | | X | X | X | X | | | | |
| **125** | X | X | X | X | | | | | X | X | X | X | | | | |
| **150** | X | X | X | X | | | | | | | X | X | | | | |
| **200** | X | X | X | X | | | | | | | X | X | | | | |

X = Available

## Shut-off valves SVA-S and SVA-L

SVA shut-off valves are available in angleway and straightway versions and with Standard neck (SVA-S) and Long neck (SVA-L)

The shut-off valves are designed to meet all industrial refrigeration application requirements and are designed to give favourable flow characteristics and are easy to dismantle and repair when necessary.

The valve cone is designed to ensure perfect closing and withstand a high system pulsation and vibration, which can be present specifically in the discharge line.

## Features SVA-S and SVA-L

- Modular Concept:
  - Each valve housing is available with butt-weld F connection and with several different sizes.
  - Possible to convert SVA-S or SVA-L to any other product in the Flexline™ SVL family (regulating valve, check & stop valve, check valve or strainer) just by replacing the complete top part.
- Fast and easy valve overhaul service. It is easy to replace the top part and no welding is needed.
- Optional accessories:
  - Heavy duty industrial hand wheel for frequent operation.
  - Cap for infrequent operation.
- Available in angleway and straightway versions with Standard neck or Long neck (DN 15 to DN 40) for insulated systems.
- Each valve type is clearly marked with type, size and performance range.
- The valves and caps are prepared for sealing, to prevent operation by unauthorized persons, using a seal wire.
- Internal metal backseating:
  - DN 15 - 65 (½ - 2½ in.)

  Internal PTFE backseating:
  - DN 80 - 200 (3 - 8 in.)
- Can accept flow in both directions.
- Housing and bonnet material is low temperature steel according to requirements of the Pressure Equipment Directive and other international classification authorities.
- Equipped with stainless steel bolts.
- Classification: DNV, CRN, BV, EAC etc.
  To get an updated list of certification on the products please contact your local Danfoss Sales Company.

## Technical data

- *Refrigerants*
  Applicable to HCFC, HFC, R717 (Ammonia) and R744 ($CO_2$). For further information please see installation instruction for SVA.
- *Temperature range*
  –60/+150°C (–76/+302°F).
- *Max. working pressure*
  52 bar g (754 psi g) for DN15 to DN 125
  25 bar g (362 psi g) for DN 150 to DN 200

  For more detail on pressure and temperature range; please see page 3.

## Connections

F

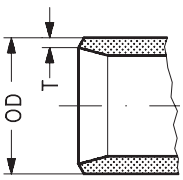


| Size mm | Size in. | OD mm | T mm | OD in. | T in. | | | $k_v$-angle m³/h | $k_v$-straight m³/h | $C_v$-angle USgal/min | $C_v$-straight USgal/min |
|---|---|---|---|---|---|---|---|---|---|---|---|
| *Butt-weld connection type F* | | | | | | | | | | | |
| 15 | ½ | 21.3 | 2 | 0.839 | 0.079 | | | 7.0 | 4.9 | 8.1 | 5.7 |
| 20 | ¾ | 26.9 | 2 | 1.059 | 0.079 | | | 14.6 | 10.2 | 16.9 | 11.8 |
| 25 | 1 | 33.7 | 2 | 1.327 | 0.079 | | | 24.8 | 17.4 | 28.8 | 20.2 |
| 32 | 1¼ | 42.4 | 2 | 1.669 | 0.079 | | | 42.6 | 29.8 | 49.4 | 34.6 |
| 40 | 1½ | 48.3 | 2 | 1.902 | 0.079 | | | 45.2 | 31.6 | 52.4 | 36.7 |
| 50 | 2 | 60.3 | 2 | 2.37 | 0.079 | | | 80 | 65 | 93 | 76 |
| 65 | 2½ | 76.1 | 2 | 3 | 0.079 | | | 120 | 97 | 140 | 113 |
| 80 | 3 | 90.9 | 3 | 3.579 | 0.118 | | | 182 | 152 | 211 | 176 |
| 100 | 4 | 116.3 | 3 | 4.579 | 0.118 | | | 313 | 278 | 363 | 323 |
| 125 | 5 | 141.7 | 3 | 5.579 | 0.118 | | | 514 | 470 | 596 | 545 |
| 150 | 6 | 170.3 | 3 | 6.705 | 0.118 | | | 785 | 597 | 911 | 693 |
| 200 | 8 | 221.1 | 3 | 8.705 | 0.118 | | | 1168 | 1024 | 1355 | 1188 |

## Design

*Connection*
- Butt-weld connection "F"
  DN 15 to 65 size: 2mm thick
  DN 80 -200 size: 3 mm thick

*Housing*
Made of special, cold resistant steel.

*Valve cone*
The valve cone can be turned on the spindle, thus there will be no friction between the cone and the seat when the valve is opened and closed and the special design will avoid cone spin due to pulsation and vibration when the valve is in open position. A teflon tightening ring provides perfect sealing with minimum closing force.

*Spindle*
Made of polished stainless steel, ideal for leap seal sealing.

*Packing gland*
The low temperature packing gland ensures a perfect tightness in the range: –60/+150°C (–76/+302°F). The packing glands are equipped with a scraper ring to prevent penetration of dirt and ice into the packing gland.

*Installation*
It is recommended that the valves be installed in the direction of flow indicated by the arrow on the valve body. The valve can be installed in the opposite direction but this slightly reduces the $k_v$-value ($C_v$-value).

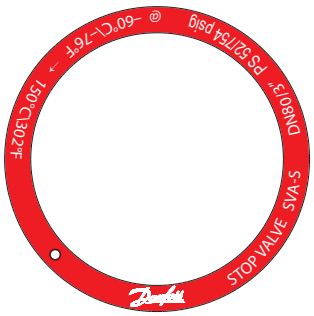

*Example of Marking Ring*

The valve is designed to withstand high internal pressure. However, the piping system in general should be designed to avoid liquid traps and reduce the risk of hydraulic pressure caused by thermal expansion.

For further information refer to installation instructions for SVA.

*Pressure Equipment Directive (PED)*
SVA valves are approved according to the European standard specified in the Pressure Equipment Directive and are CE marked.
For further details / restrictions - see Installation Instruction.

| SVA | | | |
|---|---|---|---|
| **Nominal bore** | DN≤ 25 mm (1 in.) | DN32-80 mm (1¼ - 3 in.) | DN100 - 200 mm (4-8 in.) |
| **Classified for** | Fluid group I | | |
| **Category** | Article 3, paragraph 3 | II | III |

## Material specification

*SVA-S 15-20 (1/2 - 3/4 in.)*

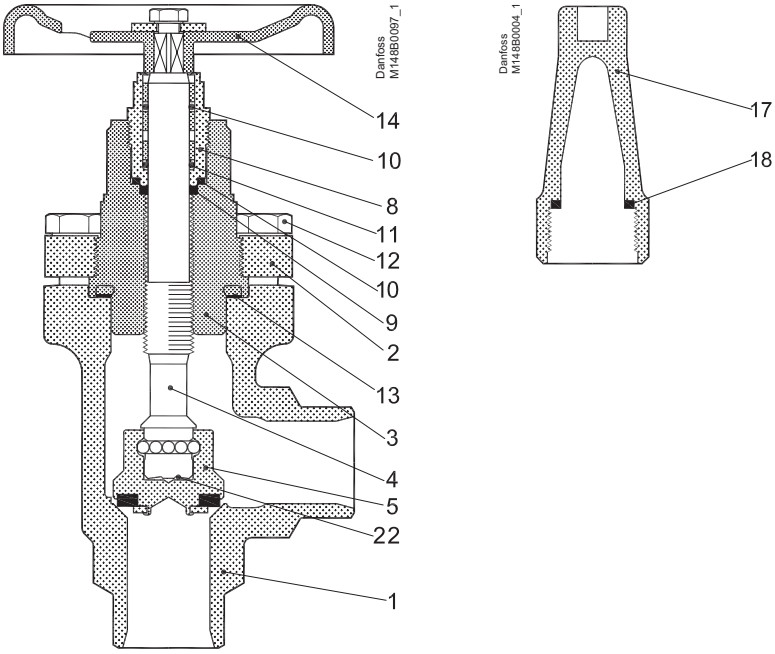


| No. | Part | Material | EN | ISO | ASTM |
|---|---|---|---|---|---|
| 1 | Housing | Steel | G20Mn5QT, 10213-3<br>----------<br>P285QH+QT, 10222-4 | | LCC, A352<br>----------<br>LF2, A350 |
| 2 | Bonnet, Flange | Steel | G20Mn5QT, 10213-3<br>----------<br>P285QH+QT, 10222-4<br>----------<br>P275NL, 10028-3 | | LCC, A352<br>----------<br>LF2, A350 |
| 3 | Bonnet, Insert | Steel | 11SMn30<br>10087 | Type 2<br>R 683/9 | AISI 1213 |
| 4 | Spindle | Stainless steel | X8CrNiS18-9<br>10088 | Type 17<br>683/13 | AISI 303 |
| 5 | Cone | Steel | 11SMn30<br>10087 | Type 2<br>R 683/9 | AISI 1213 |
| 8 | Packing gland | Stainless steel | X8CrNiS18-9<br>10088 | Type 17<br>683/13 | AISI 303 |
| 9 | Packing washer | Aluminium | | | |
| 10 | O-ring | Cloroprene (Neoprene) | | | |
| 11 | Spring loaded Teflon ring | PTFE | | | |
| 12 | Bolts | Stainless steel | A2-70 | A2-70 | Type 308 |
| 13 | Gasket | Fiber, Non-asbestos | | | |
| 14 | Handwheel | Steel | | | |
| 17 | Cap | Aluminium | | | |
| 18 | Gasket for cap | Nylon | | | |
| 19 | Locking nut | Steel | | | |
| 20 | Screw | Steel | | | |
| 22 | Disk spring | Steel | | | |

## Material specification

*SVA-S 25-40 (1 - 1½ in.)*

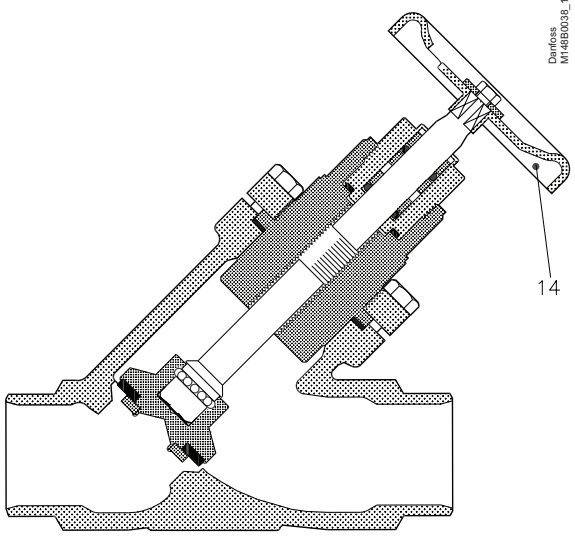


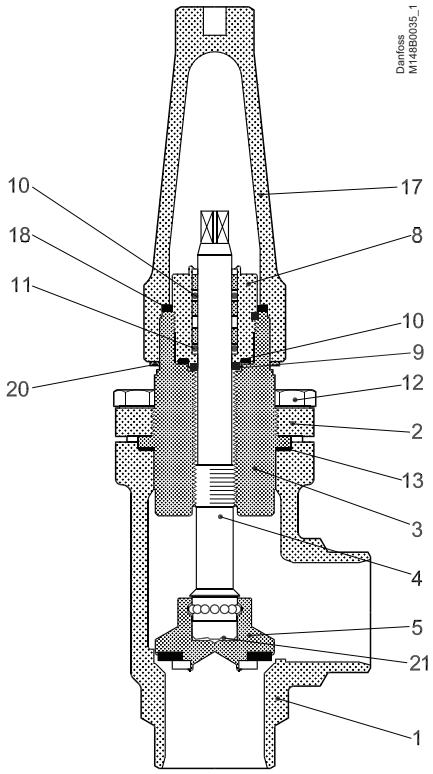


| No. | Part | Material | EN | ISO | ASTM |
|---|---|---|---|---|---|
| 1 | Housing | Steel | G20Mn5QT, 10213-3<br>----------<br>P285QH+QT, 10222-4 | | LCC, A352<br>----------<br>LF2, A350 |
| 2 | Bonnet, Flange | Steel | G20Mn5QT, 10213-3<br>----------<br>P285QH+QT, 10222-4<br>----------<br>P275NL, 10028-3 | | LCC, A352<br>----------<br>LF2, A350 |
| 3 | Bonnet, Insert | Steel | 11SMn30<br>10087 | Type 2<br>R 683/9 | AISI 1213 |
| 4 | Spindle | Stainless steel | X8CrNiS18-9<br>10088 | Type 17<br>683/13 | AISI 303 |
| 5 | Cone | Steel | 11SMn30<br>10087 | Type 2<br>R 683/9 | AISI 1213 |
| 8 | Packing gland | Stainless steel | X8CrNiS18-9<br>10088 | Type 17<br>683/13 | AISI 303 |
| 9 | Packing washer | Aluminium | | | |
| 10 | O-ring | Cloroprene (Neoprene) | | | |
| 11 | Spring loaded Teflon ring | PTFE | | | |
| 12 | Bolts | Stainless steel | A2-70 | A2-70 | Type 308 |
| 13 | Gasket | Fiber, Non-asbestos | | | |
| 14 | Handwheel | Steel | | | |
| 17 | Cap | Aluminium | | | |
| 18 | Gasket for cap | Nylon | | | |
| 20 | Identification ring | Stainless steel | | | |
| 21 | Disk spring | Steel | | | |

## Material specification

*SVA-L 15 - 40 (½ - 1½ in.)*

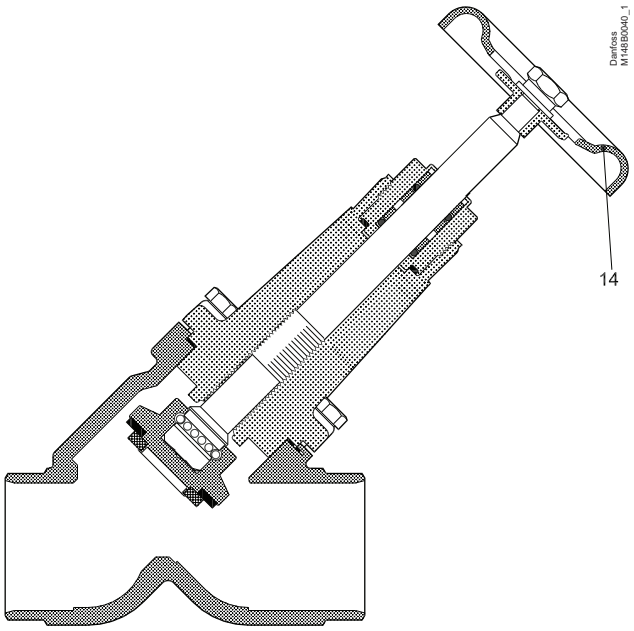


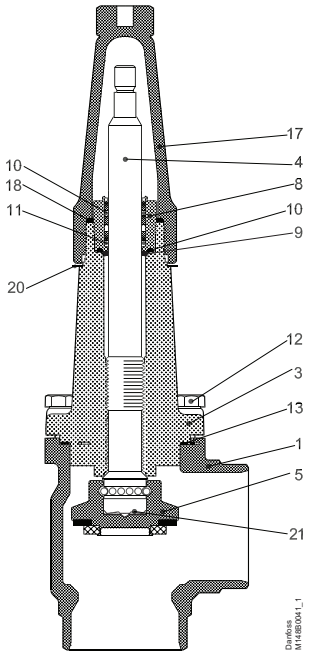


| No. | Part | Material | EN | ISO | ASTM |
|---|---|---|---|---|---|
| 1 | Housing | Steel | G20Mn5QT, 10213-3<br>----------<br>P285QH+QT, 10222-4 | | LCC, A352<br>----------<br>LF2, A350 |
| 3 | Valve bonnet | Steel | G20Mn5QT, 10213-3<br>----------<br>P285QH+QT, 10222-4 | | LCC, A352<br>----------<br>LF2, A350 |
| 4 | Spindle | Stainless steel | X8CrNiS18-9<br>10088 | Type 17<br>683/13 | AISI 303 |
| 5 | Cone | Steel | 11SMn30<br>10087 | Type 2<br>R 683/9 | AISI 1213 |
| 8 | Packing gland | Stainless steel | X8CrNiS18-9<br>10088 | Type 17<br>683/13 | AISI 303 |
| 9 | Packing washer | Aluminium | | | |
| 10 | O-ring | Cloroprene (Neoprene) | | | |
| 11 | Spring loaded Teflon ring | PTFE | | | |
| 12 | Bolts | Stainless steel | A2-70 | A2-70 | Type 308 |
| 13 | Gasket | Fiber, Non-asbestos | | | |
| 14 | Hand wheel | Steel | | | |
| 17 | Cap | Aluminium | | | |
| 18 | Gasket for cap | Nylon (PA6) | | | |
| 20 | Identification ring | Stainless steel | | | |
| 21 | Disk spring | Steel | | | |

## Material specification

*SVA-S 50-65 (2 - 2½ in.)*

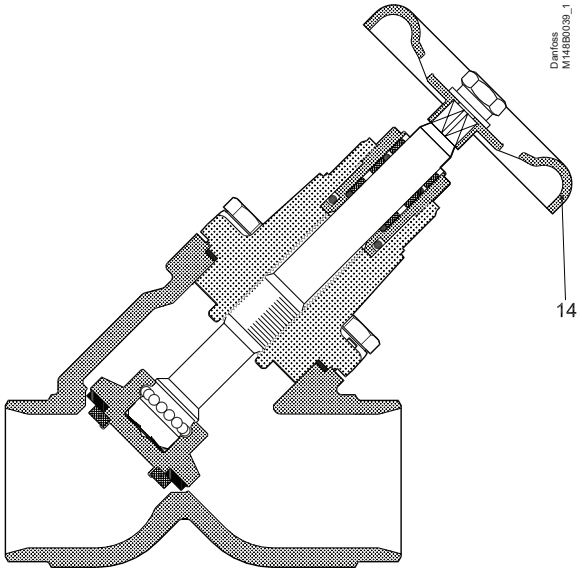


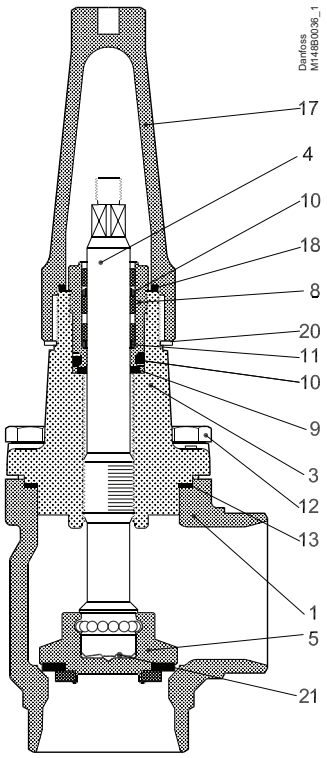


| No. | Part | Material | EN | ISO | ASTM |
|---|---|---|---|---|---|
| 1 | Housing | Steel | G20Mn5QT, 10213-3<br>----------<br>P285QH+QT, 10222-4 | | LCC, A352<br>----------<br>LF2, A350 |
| 3 | Valve bonnet | Steel | G20Mn5QT, 10213-3<br>----------<br>P285QH+QT, 10222-4 | | LCC, A352<br>----------<br>LF2, A350 |
| 4 | Spindle | Stainless steel | X8CrNiS18-9<br>10088 | Type 17<br>683/13 | AISI 303 |
| 5 | Cone | Steel | 11SMn30<br>10087 | Type 2<br>R 683/9 | AISI 1213 |
| 8 | Packing gland | Stainless steel | X8CrNiS18-9<br>10088 | Type 17<br>683/13 | AISI 303 |
| 9 | Packing washer | Aluminium | | | |
| 10 | O-ring | Cloroprene (Neoprene) | | | |
| 11 | Spring loaded Teflon ring | PTFE | | | |
| 12 | Bolts | Stainless steel | A2-70 | A2-70 | Type 308 |
| 13 | Gasket | Fiber, Non-asbestos | | | |
| 14 | Handwheel | Steel | | | |
| 17 | Cap | Aluminium | | | |
| 18 | Gasket for cap | Nylon | | | |
| 19 | Locking nut | Steel | | | |
| 20 | Identification ring | Stainless steel | | | |
| 21 | Disk spring | Steel | | | |

## Material specification

*SVA-S 80 - 150 (3 - 6 in.)*

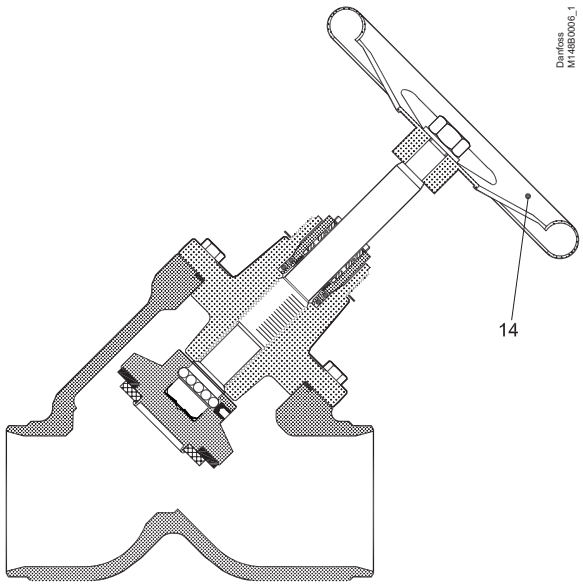


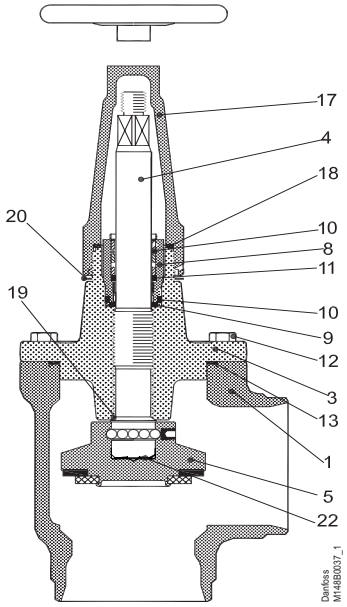


| No. | Part | Material | EN | ISO | ASTM |
|---|---|---|---|---|---|
| 1 | Housing | Steel | G20Mn5QT<br>10213-3 | | LCC<br>A352 |
| 3 | Valve bonnet | Steel | G20Mn5QT, 10213-3<br>----------<br>P285QH+QT, 10222-4 | | LCC, A352<br>----------<br>LF2, A350 |
| 4 | Spindle | Stainless steel | X5CrNi18-10<br>10088 | Type 11,<br>R 683/13 | AISI 304,<br>A276 |
| 5 | Cone<br>Cone seal | Steel<br>Teflon (PTFE) | 11SMn30<br>10087 | Type 2, R 683/9 | AISI 1213 |
| 8 | Packing gland | Stainless steel | X8CrNiS18-9<br>10088 | Type 17<br>R 683/13 | AISI 303 |
| 9 | Packing washer | Aluminium | | | |
| 10 | O-ring | Cloroprene (Neoprene) | | | |
| 11 | Spring loaded Teflon ring | PTFE | | | |
| 12 | Bolts | Stainless steel | A2-70 | A2-70 | Type 308 |
| 13 | Gasket | Fiber, Non-asbestos | | | |
| 14 | Hand wheel | Steel | | | |
| 17 | Cap | Aluminium | | | |
| 18 | Gasket for cap | Nylon (PA 6) | | | |
| 19 | Soft backseat | Teflon (PTFE) | | | |
| 20 | Identification ring | Stainless steel | | | |
| 22 | Disk spring | Steel | | | |

## Material specification

*SVA-S 200 (8 in.)*

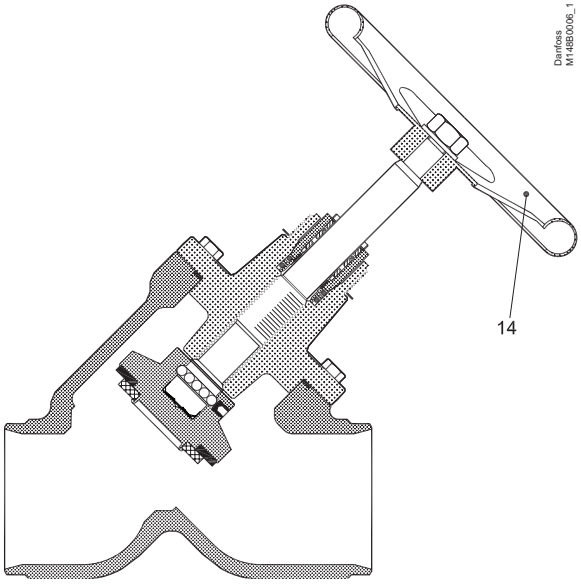


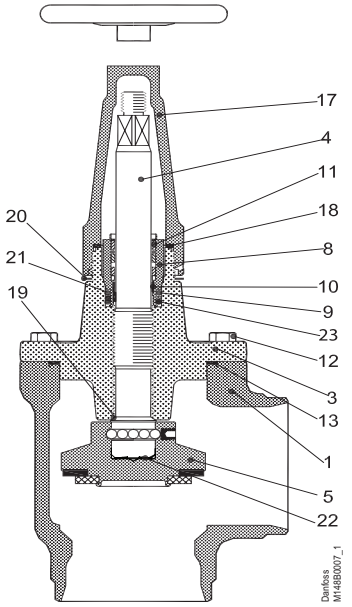


| No. | Part | Material | EN | ISO | ASTM |
|---|---|---|---|---|---|
| 1 | Housing | Steel | G20Mn5QT<br>10213-3 | | LCC<br>A352 |
| 3 | Valve bonnet | Steel | G20Mn5QT, 10213-3<br>----------<br>P285QH+QT, 10222-4 | | LCC, A352<br>----------<br>LF2, A350 |
| 4 | Spindle | Stainless steel | X5CrNi18-10<br>10088 | Type 11,<br>R 683/13 | AISI 304,<br>A276 |
| 5 | Cone<br>Cone seal | Steel<br>Teflon (PTFE) | 11SMn30<br>10087 | Type 2, R 683/9 | AISI 1213 |
| 8 | Packing gland | Stainless steel | X8CrNiS18-9<br>10088 | Type 17<br>R 683/13 | AISI 303 |
| 9 | O-ring | Cloroprene (Neoprene) | | | |
| 10 | Spring loaded Teflon ring | PTFE | | | |
| 11 | O-ring | Cloroprene (Neoprene) | | | |
| 12 | Bolts | Stainless steel | A2-70 | A2-70 | Type 308 |
| 13 | Gasket | Fiber, Non-asbestos | | | |
| 14 | Hand wheel | Steel | | | |
| 15 | Washer | Stainless steel | | | |
| 16 | Nut | Stainless steel | | | |
| 17 | Cap | Aluminium | | | |
| 18 | Gasket for cap | Nylon (PA 6) | | | |
| 19 | Soft backseat | Teflon (PTFE) | | | |
| 20 | Identification ring | Stainless steel | | | |
| 21 | Wear ring | Teflon (PTFE) | | | |
| 22 | Disk spring | Steel | | | |
| 23 | O-ring | PTFE/Cloroprene (Neoprene) | | | |

## Dimensions and weights

*SVA 15 - 40 (½ - 1½ in. ) in angleway version with cap / hand wheel*

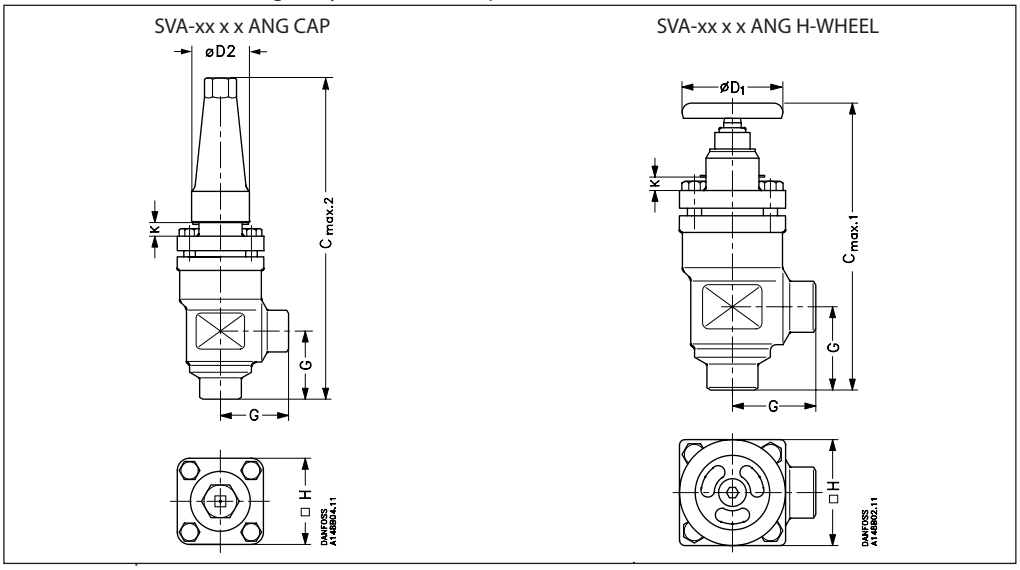


| Valve size | | K | | $C_{max.1}$ | $C_{max.2}$ | G | | $ØD_1$ | $ØD_2$ | □H | | Weight |
|---|---|---|---|---|---|---|---|---|---|---|---|---|
| *SVA-S* | | | | | | | | | | | | |
| SVA 15 - 20 | mm | 4 | | 178 | 189 | 45 | | 60 | 38 | 60 | | 1.4 kg |
| SVA (½ - ¾) | in. | 0.16 | | 7.00 | 7.44 | 1.77 | | 2.36 | 1.5 | 2.36 | | 3.1 lb |
| SVA 25 - 40 | mm | 12 | | 234 | 268 | 55 | | 80 | 50 | 70 | | 2.4 kg |
| SVA (1 - 1½) | in. | 0.47 | | 9.21 | 10.55 | 2.17 | | 3.15 | 1.97 | 2.76 | | 5.3 lb |
| *SVA-L* | | | | | | | | | | | | |
| SVA 15 - 20 | mm | 63 | | 237 | 248 | 45 | | 60 | 38 | 60 | | 1.4 kg |
| SVA (½ - ¾) | in. | 2.48 | | 9.33 | 9.76 | 1.77 | | 2.36 | 1.5 | 2.36 | | 3.1 lb |
| SVA 25 - 40 | mm | 74 | | 296 | 330 | 55 | | 80 | 50 | 70 | | 2.4 kg |
| SVA (1 - 1½) | in. | 2.91 | | 11.65 | 12.99 | 2.17 | | 3.15 | 1.97 | 2.76 | | 5.3 lb |

Specified weights are approximate values only.

## Dimensions and weights

*SVA 15 - 40 (½ - 1½ in. ) straightway version with cap / hand wheel*

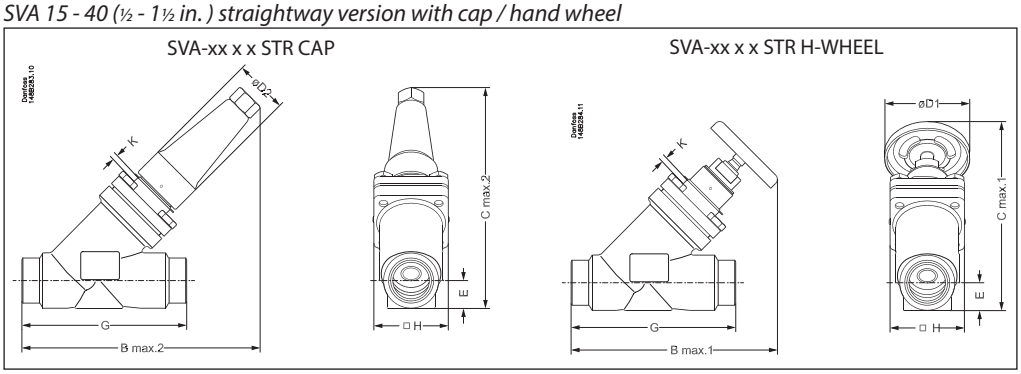


| Valve size | | K | $C_{max.1}$ | $C_{max.2}$ | $B_{max.1}$ | $B_{max.2}$ | E | G | $ØD_1$ | $ØD_2$ | □H | Weight |
|---|---|---|---|---|---|---|---|---|---|---|---|---|
| *SVA-S* | | | | | | | | | | | | |
| SVA 15 - 20 | mm | 4 | 146 | 141 | 160 | 156 | 20 | 120 | 60 | 38 | 60 | 2.0 kg |
| SVA (½ - ¾) | in. | 0.16 | 5.74 | 5.55 | 6.30 | 6.14 | 0.79 | 4.72 | 2.36 | 1.50 | 2.36 | 4.4 lb |
| SVA 25 - 40 | mm | 12 | 199 | 208 | 212 | 222 | 26 | 155 | 80 | 50 | 70 | 3.0 kg |
| SVA (1 - 1½) | in. | 0.47 | 7.83 | 8.19 | 8.35 | 8.74 | 1.02 | 6.10 | 3.15 | 1.97 | 2.76 | 6.6 lb |
| *SVA-L* | | | | | | | | | | | | |
| SVA 15 - 20 | mm | 63 | 188 | 184 | 202 | 198 | 20 | 120 | 60 | 38 | 60 | 2.0 kg |
| SVA (½ - ¾) | in. | 2.48 | 7.40 | 7.24 | 7.95 | 7.80 | 0.79 | 4.72 | 2.36 | 1.50 | 2.36 | 4.4 lb |
| SVA 25 - 40 | mm | 74 | 243 | 252 | 256 | 265 | 26 | 155 | 80 | 50 | 70 | 3.0 kg |
| SVA (1 - 1½) | in. | 2.91 | 9.57 | 9.92 | 10.08 | 10.43 | 1.02 | 6.10 | 3.15 | 1.97 | 2.76 | 6.6 lb |

Specified weights are approximate values only.

## Dimensions and weights

*SVA 50 - 65 (2 - 2½ in.) in angleway version with cap / hand wheel*

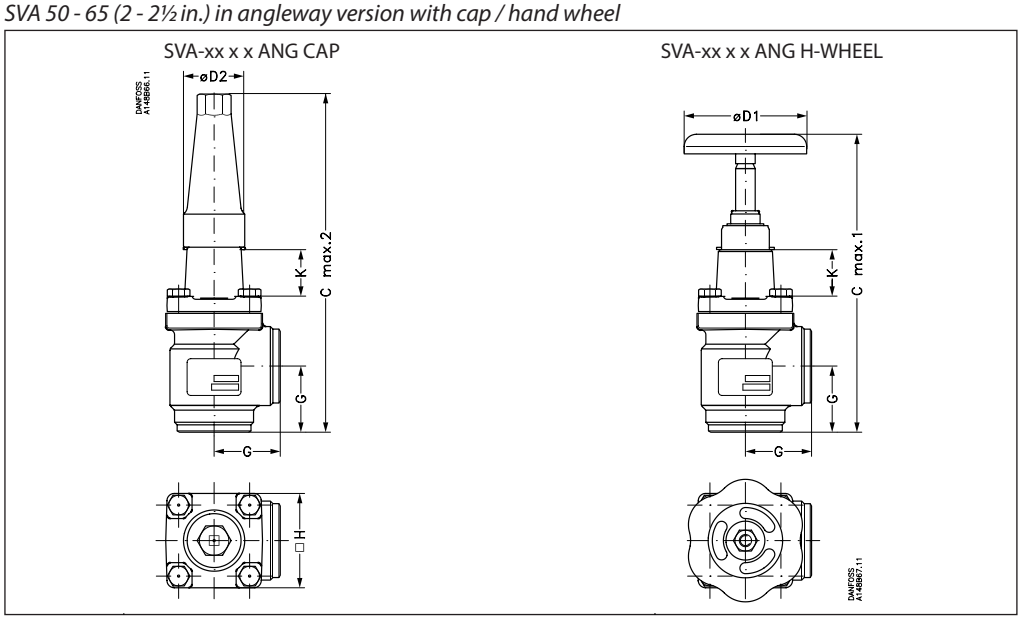


| Valve size | | K | | $C_{max.1}$ | $C_{max.2}$ | | G | $ØD_1$ | $ØD_2$ | □H | | Weight |
|---|---|---|---|---|---|---|---|---|---|---|---|---|
| *SVA-S* | | | | | | | | | | | | |
| SVA 50 | mm | 70 | | 284 | 315 | | 60 | 100 | 50 | 77 | | 3.2 kg |
| SVA (2) | in. | 2.76 | | 11.18 | 12.40 | | 2.36 | 3.94 | 1.97 | 3.03 | | 7.1 lb |
| SVA 65 | mm | 70 | | 310 | 335 | | 70 | 100 | 50 | 90 | | 4.8 kg |
| SVA (2½) | in. | 2.76 | | 12.20 | 13.19 | | 2.76 | 3.94 | 1.97 | 3.54 | | 10.6 lb |

Specified weights are approximate values only.

## Dimensions and weights

*SVA 50 - 65 (2 - 2½ in.) in straightway version with cap / hand wheel*

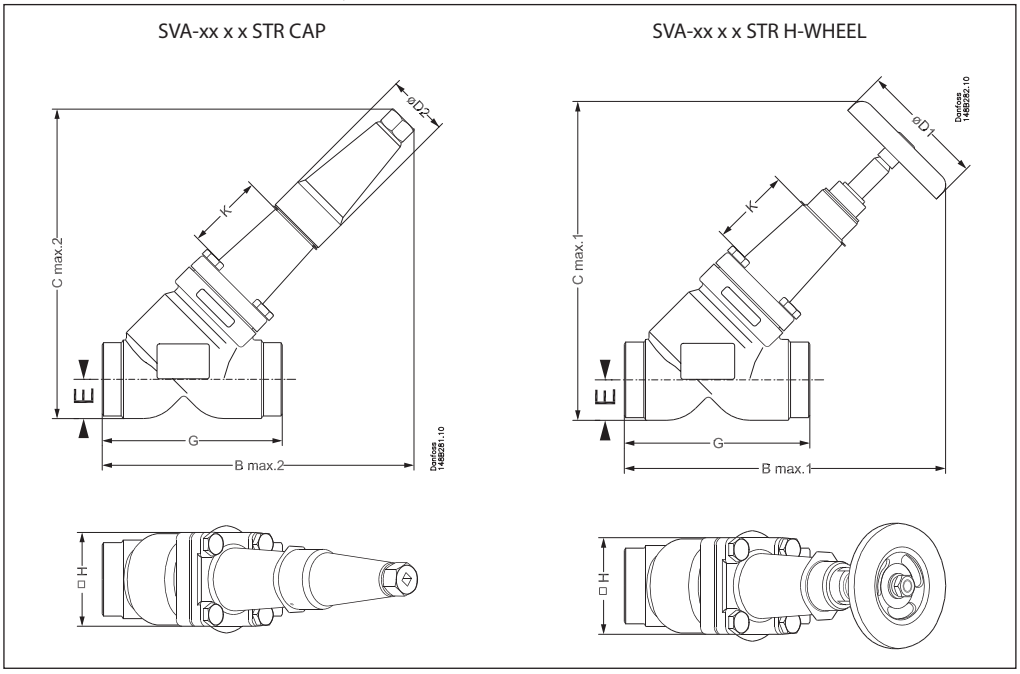


| Valve size | | K | $B_{max.1}$ | $B_{max.2}$ | $C_{max.1}$ | $C_{max.2}$ | E | G | $ØD_1$ | $ØD_2$ | □H | Weight |
|---|---|---|---|---|---|---|---|---|---|---|---|---|
| *SVA-S* | | | | | | | | | | | | |
| SVA 50 | mm | 70 | 259 | 259 | 257 | 257 | 32 | 148 | 100 | 50 | 77 | 4.2 kg |
| SVA (2) | in. | 2.76 | 10.20 | 10.20 | 10.12 | 10.12 | 1.26 | 5.83 | 3.94 | 1.97 | 3.03 | 9.3 lb |
| SVA 65 | mm | 70 | 284 | 280 | 284 | 280 | 40 | 176 | 100 | 50 | 90 | 6.3 kg |
| SVA (2½) | in. | 2.76 | 11.18 | 11.02 | 11.18 | 11.02 | 1.57 | 6.93 | 3.94 | 1.97 | 3.54 | 13.9 lb |

Specified weights are approximate values only.

## Dimensions and weights

*SVA 80 - 200 (3 - 8 in.) angleway version with cap / hand wheel*

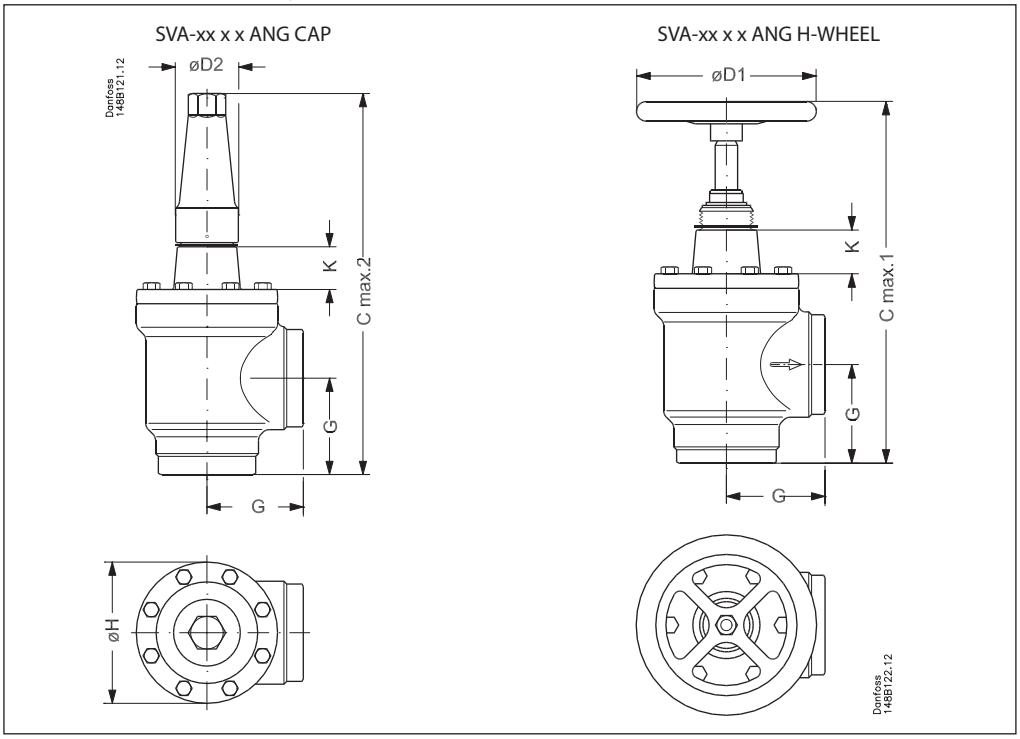


| Valve size | | K | | $C_{max.1}$ | $C_{max.2}$ | | G | $ØD_1$ | $ØD_2$ | | ØH | Weight |
|---|---|---|---|---|---|---|---|---|---|---|---|---|
| *SVA-S* | | | | | | | | | | | | |
| SVA 80 | mm | 76 | | 373 | 388 | | 90 | 200 | 58 | | 129 | 9.7 kg |
| SVA (3) | in. | 3.00 | | 14.69 | 15.28 | | 3.54 | 7.87 | 2.28 | | 5.08 | 21.4 lb |
| SVA 100 | mm | 90 | | 432 | 437 | | 106 | 250 | 58 | | 156 | 15.3 kg |
| SVA (4) | in. | 3.54 | | 17.00 | 17.20 | | 4.17 | 9.84 | 2.28 | | 6.14 | 33.7 lb |
| SVA 125 | mm | 90 | | 517 | 533 | | 128 | 315 | 74 | | 193 | 28.1 kg |
| SVA (5) | in. | 3.54 | | 20.35 | 20.98 | | 5.04 | 12.40 | 2.91 | | 7.60 | 61.9 lb |
| SVA 150 | mm | 90 | | 564 | 568 | | 145 | 315 | 74 | | 219 | 39.7 kg |
| SVA (6) | in. | 3.54 | | 22.20 | 22.36 | | 5.71 | 12.40 | 2.91 | | 8.62 | 87.5 lb |
| SVA 200 | mm | 90 | | 675 | 678 | | 180 | 400 | 86 | | 276 | 79.5 kg |
| SVA (8) | in. | 3.54 | | 26.57 | 26.69 | | 7.09 | 15.75 | 3.39 | | 10.87 | 175.3 lb |

Specified weights are approximate values only.

## Dimensions and weights

*SVA 80 - 200 (3 - 8 in.) straightway version with cap / hand wheel*

SVA-xx x x STR CAP

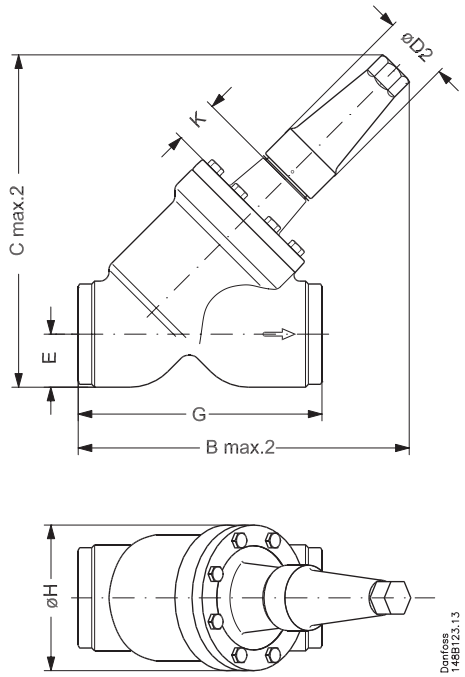


SVA-xx x x STR H-WHEEL

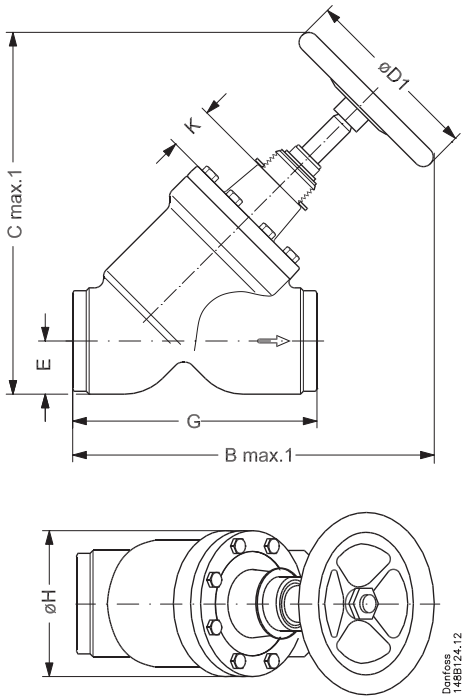


| Valve size | | K | $B_{max.1}$ | $B_{max.2}$ | $C_{max.1}$ | $C_{max.2}$ | E | G | $ØD_1$ | $ØD_2$ | ØH | Weight |
|---|---|---|---|---|---|---|---|---|---|---|---|---|
| *SVA-S* | | | | | | | | | | | | |
| SVA 80 | mm | 76 | 365 | 321 | 367 | 322 | 48 | 216 | 200 | 58 | 129 | 10.9 kg |
| SVA (3) | in. | 3.00 | 14.37 | 12.64 | 14.45 | 12.72 | 1.89 | 8.50 | 7.87 | 2.28 | 5.08 | 24.0 lb |
| SVA 100 | mm | 90 | 435 | 367 | 443 | 375 | 60 | 264 | 250 | 58 | 156 | 18.2 kg |
| SVA (4) | in. | 3.54 | 17.13 | 14.45 | 17.44 | 14.76 | 2.36 | 10.39 | 9.84 | 2.28 | 6.14 | 40.1 lb |
| SVA 125 | mm | 90 | 526 | 444 | 538 | 456 | 74 | 322 | 315 | 74 | 193 | 32.8 kg |
| SVA (5) | in. | 3.54 | 20.71 | 17.48 | 21.18 | 17.95 | 2.91 | 12.68 | 12.40 | 2.91 | 7.60 | 72.3 lb |
| SVA 150 | mm | 90 | 572 | 483 | 594 | 505 | 91 | 370 | 315 | 74 | 219 | 60.0 kg |
| SVA (6) | in. | 3.54 | 22.52 | 19.02 | 23.39 | 19.88 | 3.58 | 14.57 | 12.40 | 2.91 | 8.62 | 132.3 lb |
| SVA 200 | mm | 90 | 692 | 579 | 726 | 613 | 117 | 464 | 400 | 86 | 276 | 111.5 kg |
| SVA (8) | in. | 3.54 | 27.24 | 22.80 | 28.58 | 24.13 | 4.61 | 18.27 | 15.75 | 3.39 | 10.87 | 245.8 lb |

Specified weights are approximate values only.

## Ordering

*Available connection sizes*

SVA-**S**:
The **S** means **S**tandard bonnet length (sizes from DN50 to DN200 are insulation friendly)

SVA-**L**:
The **L** means **L**ong bonnet length (insulation friendly)

| Size | SVA-S | SVA-L |
|---|---|---|
| 15 | x | x |
| 20 | x | x |
| 25 | x | x |
| 32 | x | x |
| 40 | x | x |
| 50 | x | |
| 65 | x | |
| 80 | x | |
| 100 | x | |
| 125 | x | |
| 150 | x | |

Please note that the type codes only serve to identify the valves, some of which may not form part of the standard product range. For further information please contact your local Danfoss Sales Company.

*Type codes*

| Valve type | **SVA** | Shut-off valve | |
|---|---|---|---|
| Nominal size in mm | | | Available connections |
| | | | F |
| (valve size measured on the connection diameter) | **15** | DN 15 (½) | x |
| | **20** | DN 20 (¾) | x |
| | **25** | DN 25 (1) | x |
| | **32** | DN 32 (1¼) | x |
| | **40** | DN 40 (1½) | x |
| | **50** | DN 50 (2) | x |
| | **65** | DN 65 (2½) | x |
| | **80** | DN 80 (3) | x |
| | **100** | DN 100 (4) | x |
| | **125** | DN 125 (5) | x |
| | **150** | DN 150 (6) | x |
| | **200** | DN 200 (8) | x |
| Connections | **F** | Butt-weld connection: with 2/3 mm thick end connection | |
| Valve housing | **ANG**<br>**STR** | Angle flow<br>Straight flow | |
| Other equipment | **H-WHEEL**<br>**CAP** | Hand wheel<br>Cap | |

## Ordering SVA-S complete valves

Example:
SVA-S 200 F angleway with hand wheel = **148B6435**

ANG = Angleway
STR = Straightway
CAP = Cap
H-WHEEL = Hand wheel

### SVA-S Angleway

| Size | | Type | MWP | | Code number |
|---|---|---|---|---|---|
| mm | in. | | bar | psi | |
| ***Butt-weld connection F*** | | | | | |
| 150 | 6 | SVA-S 150 F ANG H-WHEEL | 25 | 362 | **148B6434** |
| 150 | 6 | SVA-S 150 F ANG CAP | 25 | 362 | **148B6436** |
| 200 | 8 | SVA-S 200 F ANG H-WHEEL | 25 | 362 | **148B6435** |
| 200 | 8 | SVA-S 200 F ANG CAP | 25 | 362 | **148B6437** |

### SVA-S Straightway

| Size | | Type | MWP | | Code number |
|---|---|---|---|---|---|
| mm | in. | | bar | psi | |
| ***Butt-weld connection F*** | | | | | |
| 150 | 6 | SVA-S 150 F STR H-WHEEL | 25 | 362 | **148B6438** |
| 150 | 6 | SVA-S 150 F STR CAP | 25 | 362 | **148B6440** |
| 200 | 8 | SVA-S 200 F STR H-WHEEL | 25 | 362 | **148B6439** |
| 200 | 8 | SVA-S 200 F STR CAP | 25 | 362 | **148B6441** |

**Important!**
Where products need to be certified according to specific certification societies or where higher pressures are required, the relevant information should be included at the time of order.

## Ordering SVA-S from the parts programme

***Example***
*(select from table 1 and 2)*

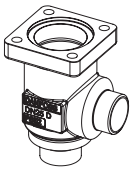

Valve housing, size 25 (1 in.), butt weld F, angleway,
**148B6416**
Table 1

+

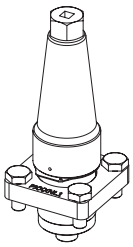

Top part, SVA-S size 25 (1 in.) with cap
**148B5476**
*Table 2*

=

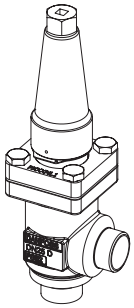

***Table 1***
*SVL valve housings w/different connections*

**Please note:**
Not all sizes available for SVA-L - see table 2.

| | | *DN 15-65 mm (½ - 2½ in.)* | *DN 80-125 mm (3 - 5 in.)* |
|---|---|---|---|
| | | 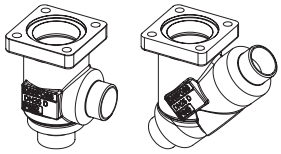 | 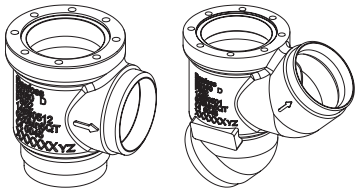 |
| **Sizes [DN]** | | **Valve Housing SVL** | |
| | | **Butt weld F** | |
| **mm** | **in.** | **ANG** | **STR** |
| 15 | ½ | **148B6414** | **148B6424** |
| 20 | ¾ | **148B6415** | **148B6425** |
| 25 | 1 | **148B6416** | **148B6426** |
| 32 | 1¼ | **148B6417** | **148B6427** |
| 40 | 1½ | **148B6418** | **148B6428** |
| 50 | 2 | **148B6419** | **148B6429** |
| 65 | 2½ | **148B6420** | **148B6430** |
| 80 | 3 | **148B6421** | **148B6431** |
| 100 | 4 | **148B6422** | **148B6432** |
| 125 | 5 | **148B6423** | **148B6433** |

***Table 2***
*SVA complete top part including gaskets and bolts*

| | | SVA-S 15-65 with cap | SVA-S 15-65 with h-wheel | SVA-S 80-125 with cap | SVA-S 80-125 with h-wheel | SVA-L 15-40 with cap | SVA-L 15-40 with h-wheel |
|---|---|---|---|---|---|---|---|
| | | 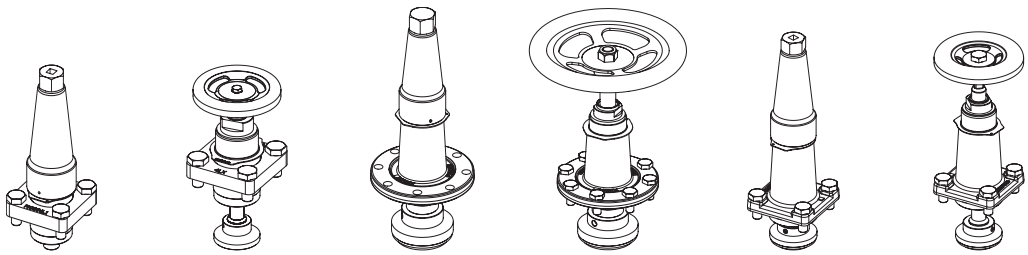 | | | | | |
| **Sizes [DN]** | | **Complete top part** | | | | | |
| **mm** | **in.** | **SVA-S CAP** | **SVA-S H-WHEEL** | **SVA-L CAP** | **SVA-L H-WHEEL** | | |
| 15 | ½ | **148B5276** | **148B5277** | **148B5278** | **148B5279** | | |
| 20 | ¾ | | | | | | |
| 25 | 1 | **148B5476** | **148B5477** | **148B5478** | **148B5479** | | |
| 32 | 1¼ | | | | | | |
| 40 | 1½ | | | | | | |
| 50 | 2 | **148B5728** | **148B5729** | | | | |
| 65 | 2½ | **148B5822** | **148B5823** | | | | |
| 80 | 3 | **148B5916** | **148B5917** | | | | |
| 100 | 4 | **148B6012** | **148B6018** | | | | |
| 125 | 5 | **148B6116** | **148B6117** | | | | |

## Check & stop valves, SCA-X
## Check valves, CHV-X

SCA-X are check valves with a built-in stop valve function. CHV-X are check valves only. SCA-X/ CHV-X are available in angleway versions.

The valves are designed to open at very low differential pressures, allow favourable flow conditions and are easy to disassemble for inspection and service.

The SCA-X is equipped with vented cap and has internal backseating enabling the spindle seal to be replaced whilst the valve still under pressure.

Laser cut V-ports provide excellent opening characteristics (SCA-X/CHV-X 50-125).

The valve cone has a built-in flexibility to ensure a precise and tight closing towards the valve seat.

A well balanced dampening effect between the piston and the cylinder gives an optimal protection during low loads and against pulsations.

## Features
## SCA-X and CHV-X

- Modular Concept:
  - Each valve housing is available with butt-weld F connection and in several different sizes.
  - Possible to convert SCA-X or CHV-X to any other product in the FlexlineTM SVL family (regulating valve, shut-off valve or strainer) just by replacing the complete top part.
- Fast and easy valve overhaul service. It is easy to replace the top part and no welding is needed.
- Designed to open at a very low differential pressure of 0.04 bar (0.58 psig).
- Designed with a built-in damping chamber preventing valve flutter in case of low refrigerant velocity and/or low density.
- Each valve is clearly marked with type, size and performance range.
- Easy to disassemble for inspection and service.
- Internal backseating enables replacement of the spindle seal whilst the valve is active, i.e. under pressure.
- Optimal flow characteristics ensuring quick opening to the fully open position.
- Protection against pulsation by built-in damping facility.
- Housing and bonnet material is low temperature steel according to requirements of the Pressure Equipment Directive and other international classification authorities.
- Equipped with Stainless steel bolts.
- Classification: DNV, CRN, BV, EAC etc.
  To get an updated list of certification on the products please contact your local Danfoss Sales Company.

## Technical data

- *Refrigerants*
  Applicable to HCFC, HFC, R717 (Ammonia) and R744 (CO2). For further information refer to the product instruction for SCA-X/CHV-X.
- *Temperature range*
  –60/+150°C (–76/+302°F).
- *Max. working pressure*
  52 bar g (754 psi g)

  For more detail on pressure and temperature range; please see page 3.

## Connections

F

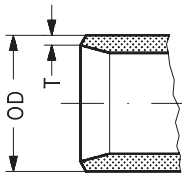


*Butt-weld connection type F*

| Size mm | Size in. | OD mm | T mm | OD in. | T in. | | | $k_v$-angle $m^3/h$ | | $C_v$-angle USgal/min | |
|---|---|---|---|---|---|---|---|---|---|---|---|
| 15 | ½ | 21.3 | 2 | 0.839 | 0.079 | | | 8.0 | | 9.3 | |
| 20 | ¾ | 26.9 | 2 | 1.059 | 0.079 | | | 10.0 | | 11.6 | |
| 25 | 1 | 33.7 | 2 | 1.327 | 0.079 | | | 24.0 | | 27.8 | |
| 32 | 1¼ | 42.4 | 2 | 1.669 | 0.079 | | | 30.0 | | 34.8 | |
| 40 | 1½ | 48.3 | 2 | 1.902 | 0.079 | | | 30.0 | | 34.8 | |
| 50 | 2 | 60.3 | 2 | 2.37 | 0.079 | | | 45 | | 53 | |
| 65 | 2½ | 76.1 | 2 | 3 | 0.079 | | | 72 | | 85 | |
| 80 | 3 | 90.9 | 3 | 3.579 | 0.118 | | | 103 | | 129 | |
| 100 | 4 | 116.3 | 3 | 4.579 | 0.118 | | | 196 | | 232 | |
| 125 | 5 | 141.7 | 3 | 5.579 | 0.118 | | | 301 | | 356 | |

## Design

*Connections*
Available with the following connections:

- Butt-weld connection "F"
  DN 15 to 65 size: 2mm thick
  DN 80 -125 size: 3 mm thick

*Housing*
The housing is made from special, cold resistant steel.

*Valve cone*
Valve cone with built in metallic stop - prevents damage to teflon ring in case of overtightening.

*Damping chamber*
The chamber is filled with refrigerants (gas or liquid), which provides a damping effect when the valve opens and closes.

*Spindle (SCA-X)*
Made of polished stainless steel, which is ideal for O-ring sealing.

*Packing Gland (SCA-X)*
The "full temperature range" packing gland is the standard for the entire SVL platform.

This ensures perfect tightness throughout the whole temperature range:
–60/+150°C (–76/+302°F).

*Installation*
The valve must be mounted vertically with the cone downwards.

The valve is designed to resist very high internal pressure. However, the piping system in general should be designed to avoid liquid traps and reduce the risk of hydraulic pressure caused by thermal expansion.

For further information refer to installation instructions for SCA-X/CHV-X.

If cold refrigeration oil having low viscosity enters and settles in the damping chamber, problems with the check valve may arise. Consequently, it may be necessary to modify the valve for more viscous liquids by enlarging the hole to the damping chamber.

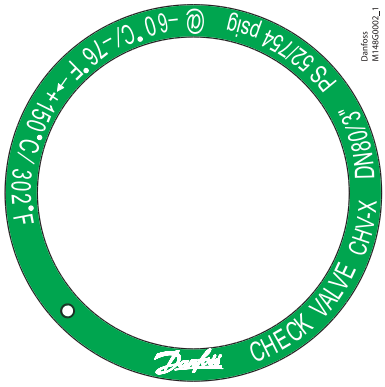


*Example of marking ring, CHV-X*

*Pressure Equipment Directive (PED)*
The SCA-X/CHV-X valves are approved according to the European standard specified in the Pressure Equipment Directive and are CE marked. For further details / restrictions - see the product instruction.

| SCA-X/CHV-X valves | | | |
|---|---|---|---|
| Nominal bore | DN = < 25 mm (1 in.) | DN32-80 mm (1¼ - 3 in.) | DN100 - 125 mm (4 - 5 in.) |
| Classified for | Fluid group I | | |
| Category | Article 3, paragraph 3 | II | III |

## Computation and selection

*Introduction*

When dimensioning SCA-X/CHV-X, it is important to select a valve that is best suited to all operating conditions. Therefore, it is necessary to consider both the nominal and part load working conditions.

The SCA-X/CHV-X valve can be calculated in two ways:
– Using the tables below.
– Using DIRcalc version 1.14 or higher.

*Example*

*SI-Units*

Assumed working conditions:
Maximum flow $\dot{V}$ = 1000 m³/h
Density ρ = 3.0 kg/m³
Minimum part load = 33%

Used expressions:
Recommended velocity - $C_{rec}$ [m/s]
Minimum recommended velocity - $C_{min, rec}$ [m/s]
Maximum velocity - $C_{max}$ [m/s]
Part load velocity - $C_{part}$ [m/s]

We know the density ρ ≈ 3.0 kg/m³, consequently $C_{rec}$ as well as $C_{min, rec}$ can be found in the figure below (standard valve).

$C_{rec}$ ≈14 m/s
$C_{min, rec}$ ≈ 3 m/s

*US-Units*

Assumed working conditions:
Maximum flow $\dot{V}$ = 1160 gpm
Density ρ = 0.187 lb/feet³
Minimum part load = 33%

Used expressions:
Recommended velocity - $C_{rec}$ [ft/min]
Minimum recommended velocity - $C_{min, rec}$ [ft/min]
Maximum velocity - $C_{max}$ [ft/min]
Part load velocity - $C_{part}$ [ft/min]

We know the density ρ ≈ 0.187 lb/feet³, consequently $C_{rec}$ as well as $C_{min, rec}$ can be found in the figure (standard valve).

$C_{rec}$ ≈ 2756 ft/min
$C_{min, rec}$ ≈ 591 ft/min

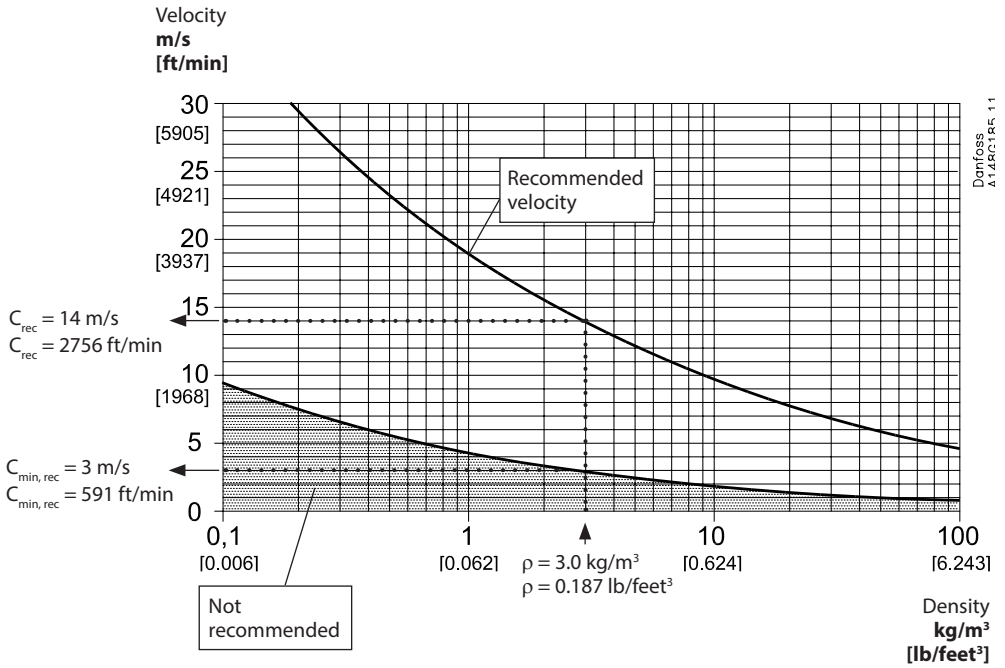


*Fig. 1*

Selection example continued on following page.

**Computation and selection**
*(continued)*

Knowing that $\dot{V}$ = 1000 m³/h (1160 gpm) fig. 2 gives the following choices:

For SCA-X/CHV-X in size DN 100 the maximum velocity $C_{max} \approx$ 31 m/s (6100 ft/min)
For SCA-X/CHV-X in size DN 125 the maximum velocity $C_{max} \approx$ 20 m/s (3900 ft/min)

In conclusion SCA-X in size DN 125 is selected because $C_{max} \approx$ 20 m/s (3900 ft/min) comes nearest to the recommended velocity $C_{rec} \approx$ 14 m/s (2756 ft/min) and at the same time part load conditions fulfil the requirements, as described:

We know that $C_{max} \approx$ 20 m/s (3900 ft/min) and that minimum part load is 33%. It follows that $C_{part} \approx$ 6.5 m/s (1290 ft/min). Thus, $C_{part}$ (6.5 m/s) > $C_{min, rec}$ (3.0 m/s) and the selected SCA-X model DN125 is the perfect choice.

If the valve in question (for instance under part load conditions) provides a velocity less than $C_{min, rec}$ the valve might start hammering and become noisy. As a result the valve may wear prematurely.

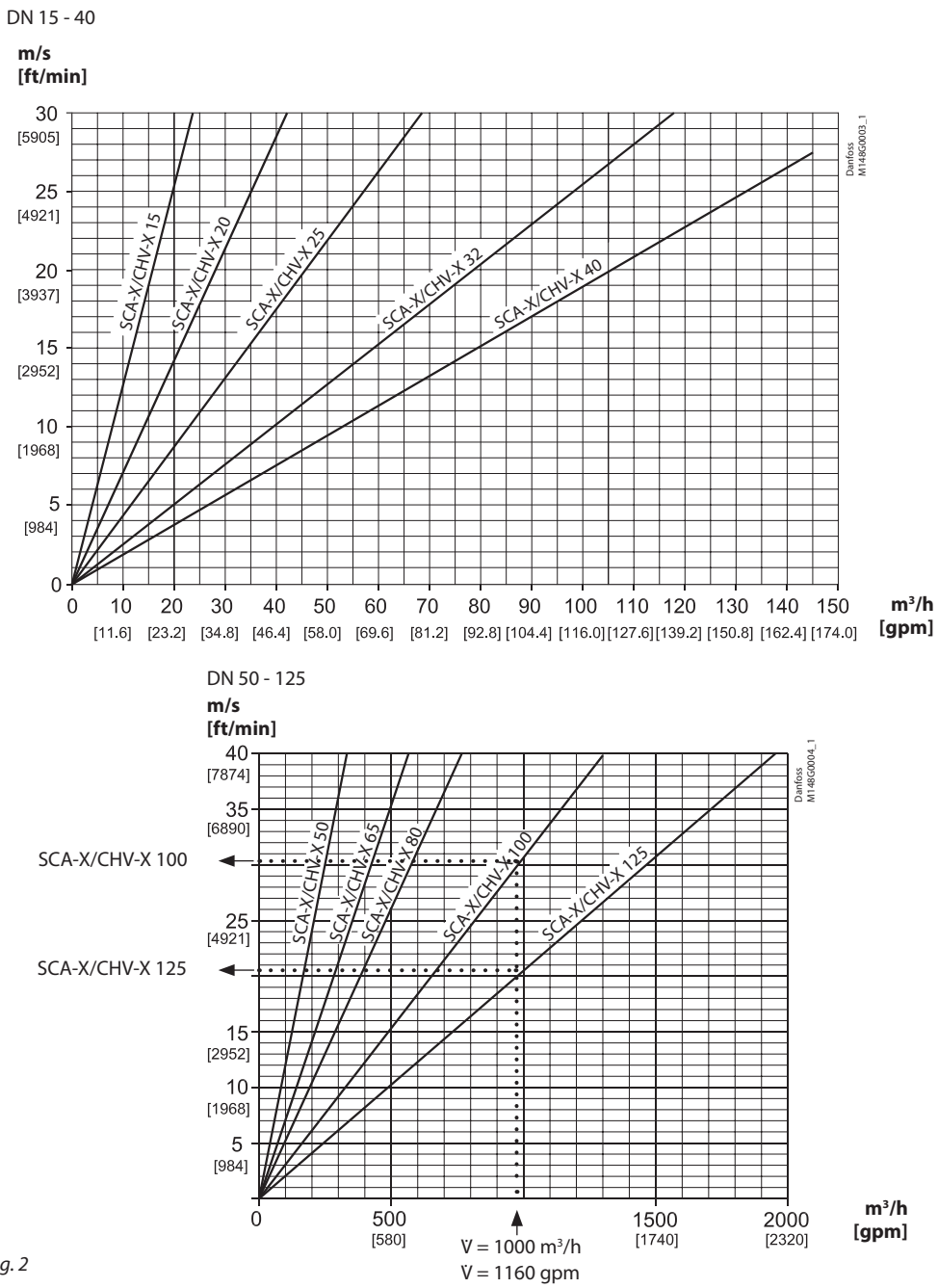


*Fig. 2*

## Material specification

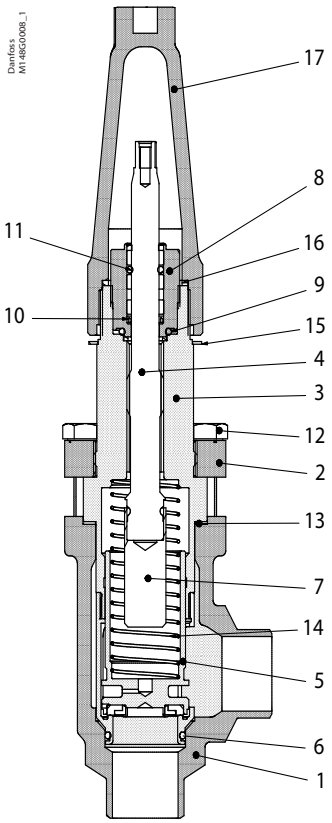


*SCA-X 15 - 40*

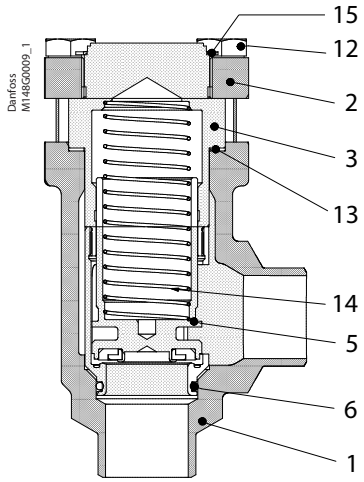


*CHV-X 15 - 40*

| No. | Part | Material | DIN/EN | ISO | ASTM |
|---|---|---|---|---|---|
| 1 | Housing | Steel | G20Mn5QT, 10213-3<br>----------<br>P285QH+QT, 10222-4 | | LCC, A352<br>----------<br>LF2, A350 |
| 2 | Bonnet, Flange | Steel | P275NL1<br>EN10028-3 | | LF2, A350 |
| 3 | Bonnet, Insert | Steel | 11SMn30<br>10087 | Type 2<br>R 683/9 | AISI 1213 |
| 4 | Spindle | Stainless steel | X8CrNiS18-9,<br>EN 10088-3 | Type 17<br>683/13 | AISI 303 |
| 5 | Cone | Steel<br>Teflon (PTFE) | | | |
| 6 | O-ring | Cloroprene (Neoprene) | | | |
| 7 | Spindle extension | Steel | | | |
| 8 | Packing gland<br>O-rings | Stainless steel<br>Cloroprene (Neoprene) | X8CrNiS18-9<br>10088 | Type 17<br>683/13 | AISI 303 |
| 9 | Packing washer | Aluminium | | | |
| 10 | Spring loaded seal | Teflon (PTFE) | | | |
| 11 | O-ring | Cloroprene (Neoprene) | | | |
| 12 | Bolts | Stainless steel | A2-70 | A2-70 | Type 308 |
| 13 | Gasket | Fiber, non-asbestos | | | |
| 14 | Spring | Steel | | | |
| 15 | Identification ring | Stainless steel | | | |
| 16 | Seal cap gasket | Nylon | | | |
| 17 | Spindle seal cap | Aluminium | | | |

## Material specification

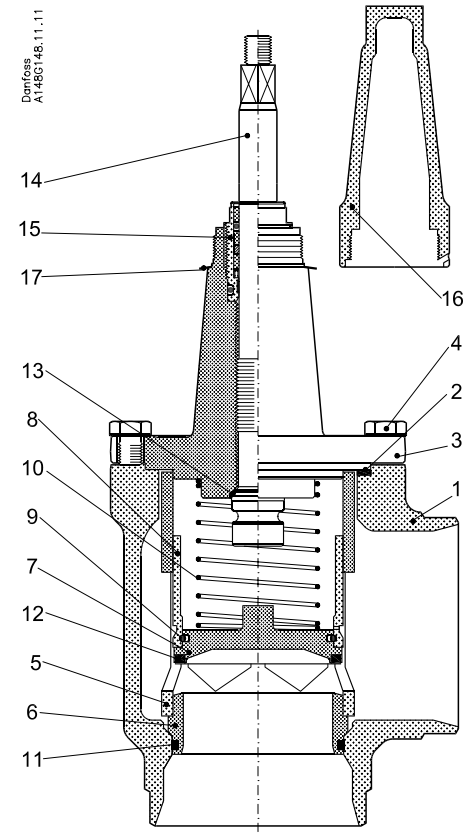


SCA-X 50 - 125

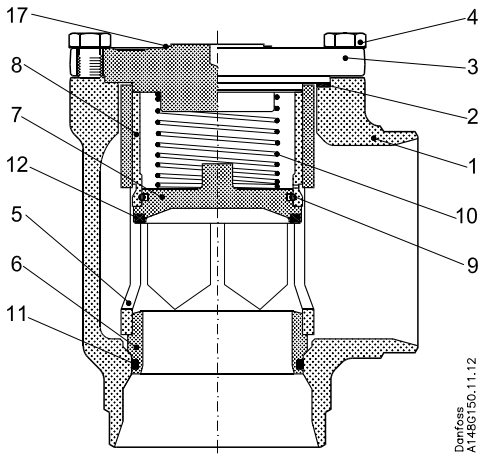


CHV-X 50 - 125

| No. | Part | Material | DIN/EN | ISO | ASTM |
|---|---|---|---|---|---|
| 1 | Housing DN 50-65 | Steel | G20Mn5QT, 10213-3<br>----------<br>P285QH+QT, 10222-4 | | LCC, A352<br>----------<br>LF2, A350 |
| | Housing DN 80-125 | Steel | G20Mn5 QT<br>SEW 685 | | LCC, A352 |
| 2 | Gasket | Fiber, Non-asbestos | | | |
| 3 | SCA-X: Valve bonnet<br>CHV-X: End cover | Steel | P285 QH EN 10222-4<br>----------<br>P275NL1 or 2 EN10028-3 | | LF2, A350<br>----------<br>A, A662 |
| 4 | Bolts | Stainless steel | A2-70 | A2-70 | A-276 |
| 5 | Tube | Steel | | | |
| 6 | Seat | Steel | | | |
| 7 | Valve plate | Steel | | | |
| 8 | Guide sleeve | Steel | | | |
| 9 | Spring ring | Steel | | | |
| 10 | Spring | Steel | | | |
| 11 | O-ring | Cloroprene (Neoprene) | | | |
| 12 | Teflon ring | Teflon (PTFE) | | | |
| 13 | Soft back seal | Teflon (PTFE) | | | |
| 14 | Spindle DN 50-65 | Stainless steel | X8CrNiS18-9<br>17440 | Type 17<br>R 683/13 | AISI 303 |
| | Spindle DN 80-125 | Stainless steel | X5CrNi1810<br>17440 | Type 11<br>683/13 | AISI 304<br>A-276 |
| 15 | Packing gland | Stainless steel | X8CrNiS18-9, EN 10088-3, | Type 17<br>R 683/13 | AISI 303 |
| 16 | Spindle seal cap and gasket | Aluminium | | | |
| 17 | Marking label | Stainless steel | | | |

## Application

Figure 3 shows the check & stop valve SCA-X in the discharge line of a screw compressor unit. The SCA-X valve in the discharge line prevents "back condensation" in the oil separator as well as pressure equalising through the compressor.

Compared to an ordinary stop and check valve arrangement the combined stop/check valve solution, as shown, is easier to install and has lower flow resistance.

Installation of the SCA-X/CHV-X in the economizer line is **not** recommended.

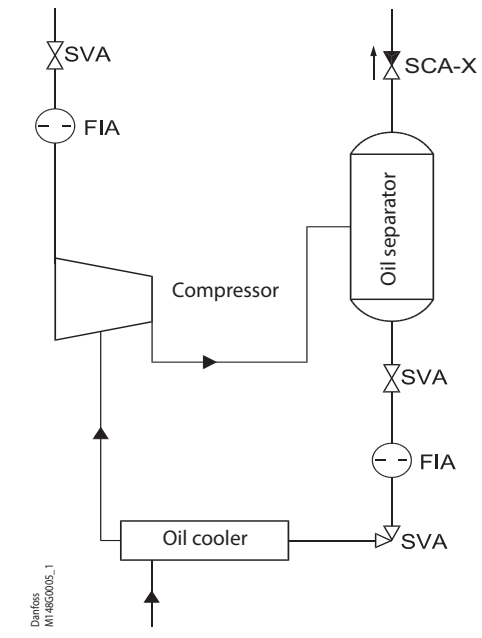


*Fig. 3*

## Dimensions and weights

*SCA-X/CHV-X 15 - 40 (½- 1½ in.)*

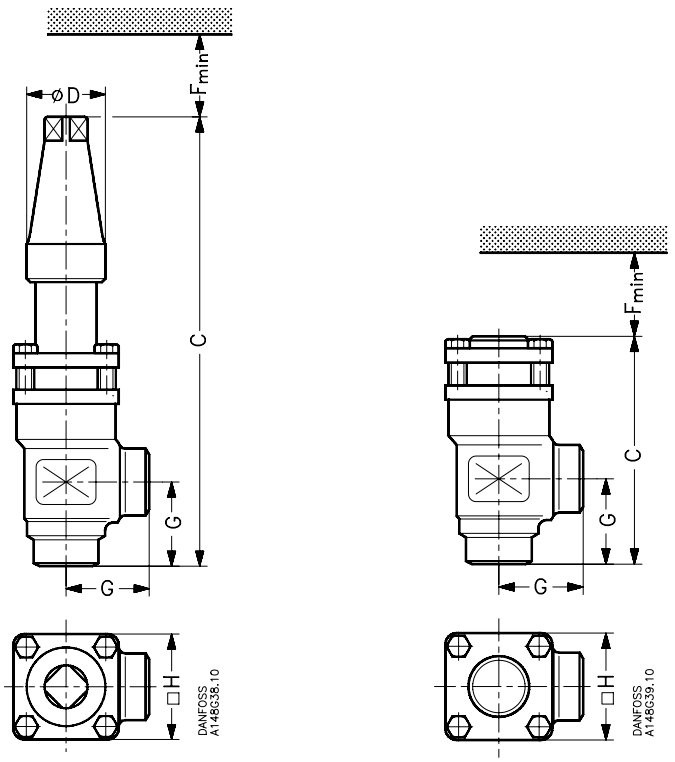


*SCA-X 15 - 40* *CHV-X 15 - 40*

| Valve size | | C | | G | | ØD | | $F_{min}$ | | □H | Weight |
|---|---|---|---|---|---|---|---|---|---|---|---|
| *SCA-X 15 - 40* | | | | | | | | | | | |
| SCA-X 15 (½ in.) | mm<br>in. | 212<br>8.35 | | 45<br>1.77 | | 38<br>1.50 | | 60<br>2.36 | | 60<br>2.36 | 1.6 kg<br>3.53 lb |
| SCA-X 20 (¾ in.) | mm<br>in. | 212<br>8.35 | | 45<br>1.77 | | 38<br>1.50 | | 60<br>2.36 | | 60<br>2.36 | 1.6 kg<br>3.53 lb |
| SCA-X 25 (1 in.) | mm<br>in. | 295<br>11.61 | | 55<br>2.17 | | 50<br>1.97 | | 85<br>3.35 | | 70<br>2.76 | 3.2 kg<br>7.05 lb |
| SCA-X 32 (1¼ in.) | mm<br>in. | 295<br>11.61 | | 55<br>2.17 | | 50<br>1.97 | | 85<br>3.35 | | 70<br>2.76 | 3.2 kg<br>7.05 lb |
| SCA-X 40 (1½ in.) | mm<br>in. | 295<br>11.61 | | 55<br>2.17 | | 50<br>1.97 | | 85<br>3.35 | | 70<br>2.76 | 3.2 kg<br>7.05 lb |

| Valve size | | C | | G | | | | $F_{min}$ | | □H | Weight |
|---|---|---|---|---|---|---|---|---|---|---|---|
| *CHV-X 15 - 40* | | | | | | | | | | | |
| CHV-X 15 (½ in.) | mm<br>in. | 103<br>4.06 | | 45<br>1.77 | | | | 60<br>2.36 | | 60<br>2.36 | 1.2 kg<br>2.65 lb |
| CHV-X 20 (¾ in.) | mm<br>in. | 103<br>4.06 | | 45<br>1.77 | | | | 60<br>2.36 | | 60<br>2.36 | 1.2 kg<br>2.65 lb |
| CHV-X 25 (1 in.) | mm<br>in. | 143<br>5.63 | | 55<br>2.17 | | | | 85<br>3.35 | | 70<br>2.76 | 2.3 kg<br>5.07 lb |
| CHV-X 32 (1¼ in.) | mm<br>in. | 143<br>5.63 | | 55<br>2.17 | | | | 85<br>3.35 | | 70<br>2.76 | 2.3 kg<br>5.07 lb |
| CHV-X 40 (1½ in.) | mm<br>in. | 143<br>5.63 | | 55<br>2.17 | | | | 85<br>3.35 | | 70<br>2.76 | 2.3 kg<br>5.07 lb |

Specified weights are approximate values only.

## Dimensions and weights

*SCA-X/CHV-X 50 - 65 (2 - 2½ in.)*

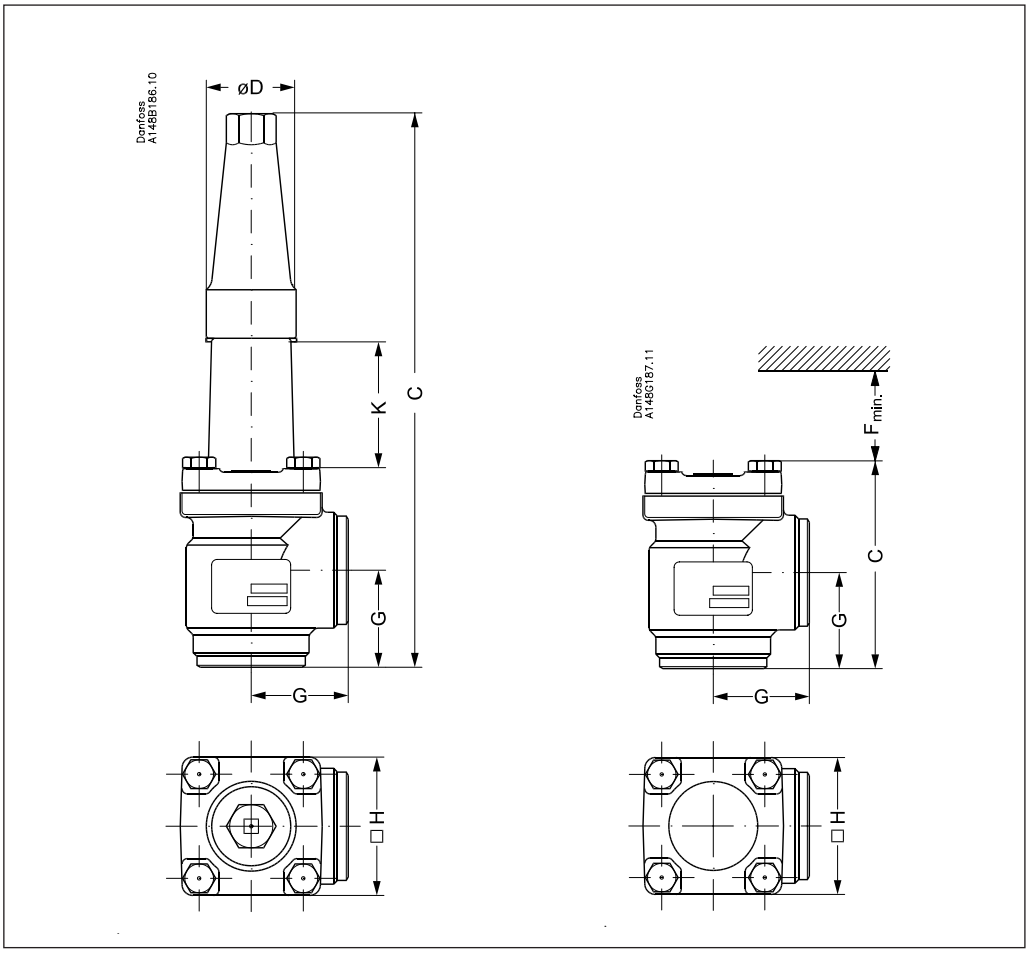


| Valve size | | K | | | C | | G | | ∅D | □H | | Weight |
|---|---|---|---|---|---|---|---|---|---|---|---|---|
| *SCA-X* | | | | | | | | | | | | |
| SCA-X 50<br>SCA-X (2) | mm<br>in. | 70<br>2.76 | | | 315<br>12.40 | | 60<br>2.36 | | 50<br>1.97 | 77<br>3.03 | | 3.8 kg<br>8.40 lb |
| SCA-X 65<br>SCA-X (2½) | mm<br>in. | 70<br>2.76 | | 12.20 | 335<br>13.19 | | 70<br>2.76 | 3.94 | 50<br>1.97 | 90<br>3.54 | | 5.5 kg<br>12.16 lb |

| Valve size | | | | | C | | G | | $F_{min.}$ | □H | | Weight |
|---|---|---|---|---|---|---|---|---|---|---|---|---|
| *CHV-X* | | | | | | | | | | | | |
| CHV-X 50<br>CHV-X (2) | mm<br>in. | | | | 132<br>5.20 | | 60<br>2.36 | | 92<br>3.62 | 77<br>3.03 | | 3.2 kg<br>7.10 lb |
| CHV-X 65<br>CHV-X (2½) | mm<br>in. | | | | 152<br>5.98 | | 70<br>2.76 | | 107<br>4.21 | 90<br>3.54 | | 4.5 kg<br>9.95 lb |

Specified weights are approximate values only.

## Dimensions and weights

*SCA-X/CHV-X 80 - 125 (3 - 5 in.)*

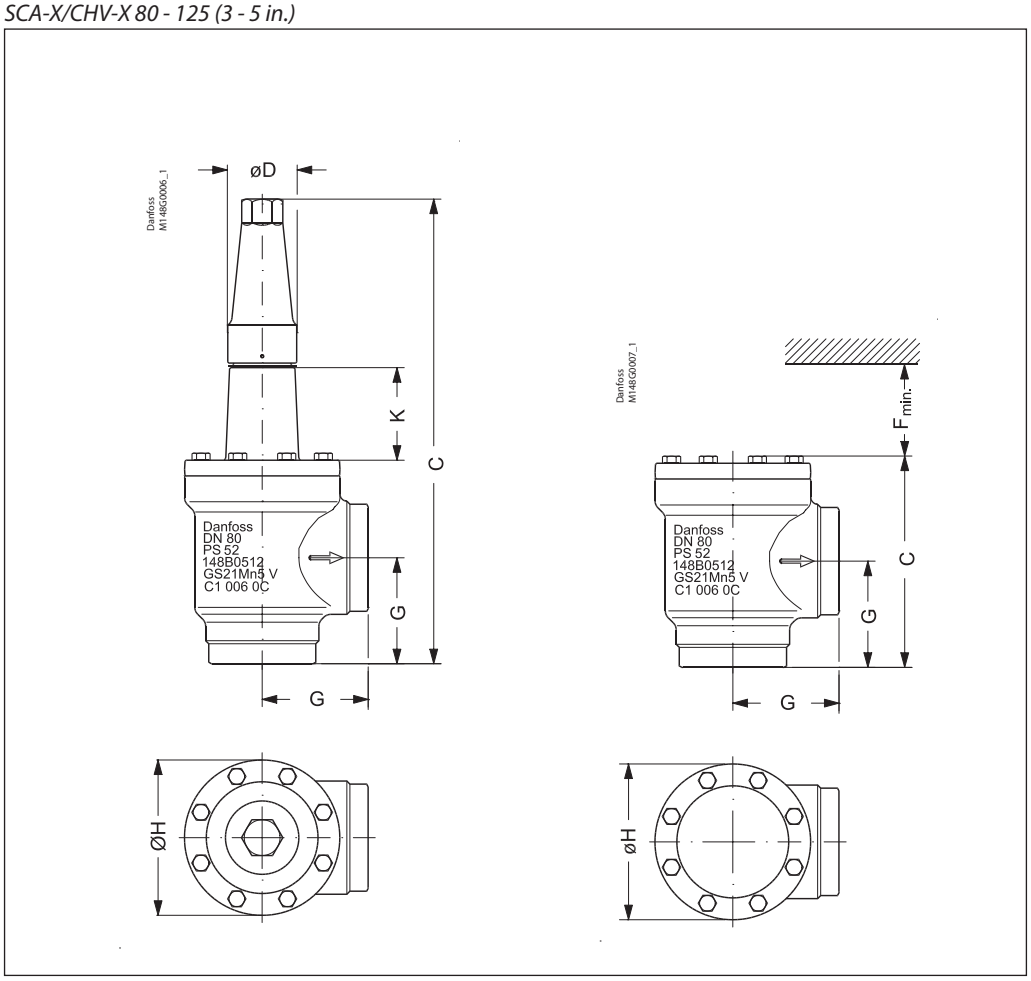


| Valve size | | K | | | C | | G | | ∅D | | ∅H | Weight |
|---|---|---|---|---|---|---|---|---|---|---|---|---|
| *SCA-X* | | | | | | | | | | | | |
| SCA-X 80<br>SCA-X (3) | mm<br>in. | 76<br>3.00 | | | 388<br>15.28 | | 90<br>3.54 | | 58<br>2.28 | | 129<br>5.08 | 9.7 kg<br>21.4 lb |
| SCA-X 100<br>SCA-X (4) | mm<br>in. | 90<br>3.54 | | | 437<br>17.20 | | 106<br>4.17 | | 58<br>2.28 | | 156<br>6.14 | 15.3 kg<br>33.7 lb |
| SCA-X 125<br>SCA-X (5) | mm<br>in. | 90<br>3.54 | | | 533<br>20.98 | | 128<br>5.04 | | 74<br>2.91 | | 193<br>7.60 | 28.1 kg<br>61.9 lb |

| Valve size | | | | | C | | G | | | $F_{min.}$ | ∅H | Weight |
|---|---|---|---|---|---|---|---|---|---|---|---|---|
| *CHV-X* | | | | | | | | | | | | |
| CHV-X 80<br>CHV-X (3) | mm<br>in. | | | | 189<br>7.44 | | 90<br>3.54 | | | 133<br>5.24 | 129<br>5.08 | 8.7 kg<br>19.23 lb |
| CHV-X 100<br>CHV-X (4) | mm<br>in. | | | | 223<br>8.78 | | 106<br>4.17 | | | 163<br>6.43 | 156<br>6.14 | 14.3 kg<br>31.60 lb |
| CHV-X 125<br>CHV-X (5) | mm<br>in. | | | | 268<br>10.55 | | 128<br>5.04 | | | 190<br>7.48 | 193<br>7.60 | 25.6 kg<br>56.58 lb |

Specified weights are approximate values only.

## Ordering SVA-X from the parts programme

***Example***
*(select from table 1 and 2)*

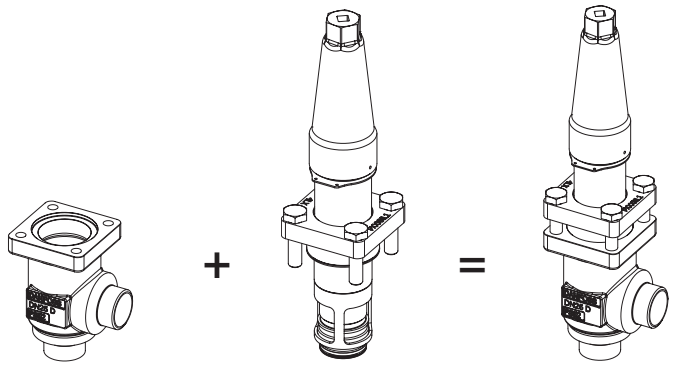

Valve housing, size 25 (1 in.), butt weld F, angleway, **148B6416**
Table 1

Top part, SCA-X size 25 (1 in.) **148B5482**
*Table 2*

***Table 1***
*SVL valve housings w/different connections*

| | | *DN 15-65 mm (½ - 2½ in.)* | *DN 80-125 mm (3 - 5 in.)* |
|---|---|---|---|
| | | 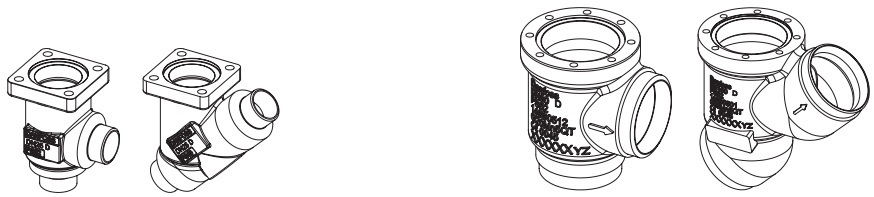 | |
| **Sizes [DN]** | | **Valve Housing SVL** | |
| | | **Butt weld F** | |
| **mm** | **in.** | **ANG** | **STR** |
| 15 | ½ | **148B6414** | **148B6424** |
| 20 | ¾ | **148B6415** | **148B6425** |
| 25 | 1 | **148B6416** | **148B6426** |
| 32 | 1¼ | **148B6417** | **148B6427** |
| 40 | 1½ | **148B6418** | **148B6428** |
| 50 | 2 | **148B6419** | **148B6429** |
| 65 | 2½ | **148B6420** | **148B6430** |
| 80 | 3 | **148B6421** | **148B6431** |
| 100 | 4 | **148B6422** | **148B6432** |
| 125 | 5 | **148B6423** | **148B6433** |

***Table 2***
*SCA-X complete top part including gaskets and bolts*

| | | SCA-X 15-50 | SCA-X 80-125 |
|---|---|---|---|
| | | 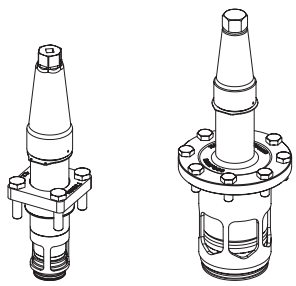 | |
| **Sizes [DN]** | | **Complete top part** | |
| **mm** | **in.** | **SCA-X** | |
| 15 | ½ | **148B5282** | |
| 20 | ¾ | | |
| 25 | 1 | **148B5482** | |
| 32 | 1¼ | | |
| 40 | 1½ | | |
| 50 | 2 | **148B5735** | |
| 65 | 2½ | **148B5825** | |
| 80 | 3 | **148B5918** | |
| 100 | 4 | **148B6019** | |
| 125 | 5 | **148B6118** | |

## Ordering CHV-X from the parts programme

***Example***
*(select from table 1 and 2)*

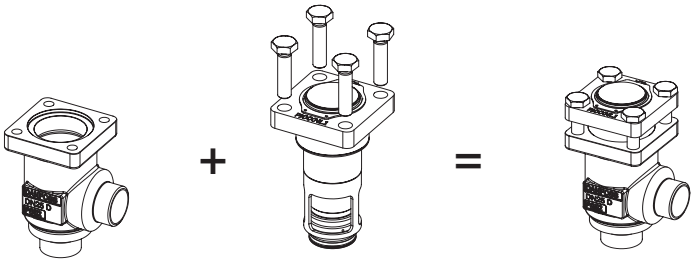

Valve housing, size 25 (1 in.), butt weld F, angleway, **148B6416** Table 1

+

Top part, CHV-X size 25 (1 in.) **148B5483** *Table 2*

=

***Table 1***
*SVL valve housings w/different connections*

| | | *DN 15-65 mm (½ - 2½ in.)* | *DN 80-125 mm (3 - 5 in.)* |
|---|---|---|---|
| | | 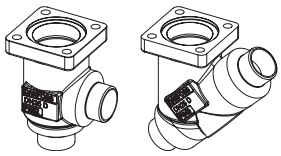 | 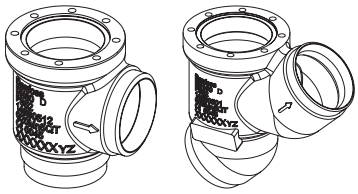 |
| **Sizes [DN]** | | **Valve Housing SVL** | |
| | | **Butt weld F** | |
| **mm** | **in.** | **ANG** | **STR** |
| 15 | ½ | **148B6414** | **148B6424** |
| 20 | ¾ | **148B6415** | **148B6425** |
| 25 | 1 | **148B6416** | **148B6426** |
| 32 | 1¼ | **148B6417** | **148B6427** |
| 40 | 1½ | **148B6418** | **148B6428** |
| 50 | 2 | **148B6419** | **148B6429** |
| 65 | 2½ | **148B6420** | **148B6430** |
| 80 | 3 | **148B6421** | **148B6431** |
| 100 | 4 | **148B6422** | **148B6432** |
| 125 | 5 | **148B6423** | **148B6433** |

***Table 2***
*CHV-X complete top part including gaskets and bolts*

| | | CHV-X 15-50 | CHV-X 80-125 |
|---|---|---|---|
| | | 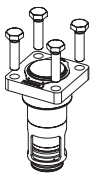 | 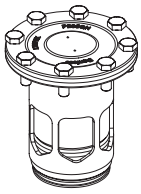 |
| **Sizes [DN]** | | **Complete top part** | |
| **mm** | **in.** | **CHV-X** | |
| 15 | ½ | **148B5283** | |
| 20 | ¾ | | |
| 25 | 1 | **148B5483** | |
| 32 | 1¼ | | |
| 40 | 1½ | | |
| 50 | 2 | **148B5747** | |
| 65 | 2½ | **148B5827** | |
| 80 | 3 | **148B5919** | |
| 100 | 4 | **148B6022** | |
| 125 | 5 | **148B6119** | |

## FIA strainers

FIA strainers are a range of angleway and straightway strainers, which are carefully designed to give favourable flow conditions. The design makes the strainer easy to install, and ensures quick strainer inspection and cleaning.

FIA strainers are used ahead of automatic controls, pumps, compressors etc., for initial plant start-up and where permanent filtration of the refrigerant is required. The strainer reduces the risk of undesirable system breakdowns and reduces wear and tear on plant components.

FIA strainers are equipped with a screen mesh of stainless steel, available in sizes 100, 150, 250 and 500µ (microns*), (US 150, 100, 72, 38 mesh*).

* Mesh is the number of threads per inch.
µ (microns) is the distance between two threads
(1µ = 1 /1000 mm).

## Features FIA

- Modular Concept:
  - Each valve housing is available with butt-weld F connection and with several different sizes.
  - Possible to convert FIA strainers to any other product in the SVL family (Shut-off valve, regulating valve, check & stop valve or check valve) just by replacing the complete top part.
- Fast and easy overhaul service. It is easy to replace the top part and no welding is needed.
- Filter net of stainless steel mounted direct without extra gaskets means easy servicing.
- Two types of strainer inserts are available:
  - A plain insert of stainless steel.
  - A pleated insert (DN 15-200) with extra large surface, which ensures long intervals between cleaning and low pressure drop.
- FIA 15-40 (½ – 1 ½ in.):
  A special insert (50µ) can be used in combination with a standard version when cleaning a plant during commissioning.
- FIA 50-200 (2 - 8 in.):
  A large capacity filter bag (50µ) can be inserted for cleaning plant during commissioning.
- FIA 65-200 (2½ - 8 in.) can be equipped with a magnetic insert for detention of iron particles and other magnetic particles.
- Each strainer clearly marked with type, size and performance range
- Housing and bonnet of low temperature steel in accordance with the requirements of the Pressure Equipment Directive and those of other international classification authorities
- Classification: DNV, CRN, BV, EAC etc.
  To get an updated list of certification on the products please contact your local Danfoss Sales Company.

## Technical data

- *Refrigerants*
  Applicable to HCFC, HFC, R717 (Ammonia) and R744 (CO2). For further information refer to the product instruction for FIA.
- *Temperature range*
  –60/+150°C (–76/+302°F).
- *Max. working pressure*
  52 bar g (754 psi g) for DN15 to DN 125
  25 bar g (362 psi g) for DN 150 to DN 200.

  For more detail on pressure and temperature range; please see page 3.

## Connections

F

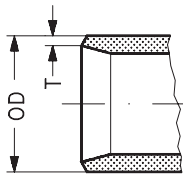


| Size mm | Size in. | OD mm | T mm | OD in. | T in. |
|---|---|---|---|---|---|
| *Butt-weld connection type F* | | | | | |
| 15 | ½ | 21.3 | 2 | 0.839 | 0.079 |
| 20 | ¾ | 26.9 | 2 | 1.059 | 0.079 |
| 25 | 1 | 33.7 | 2 | 1.327 | 0.079 |
| 32 | 1¼ | 42.4 | 2 | 1.669 | 0.079 |
| 40 | 1½ | 48.3 | 2 | 1.902 | 0.079 |
| 50 | 2 | 60.3 | 2 | 2.37 | 0.079 |
| 65 | 2½ | 76.1 | 2 | 3 | 0.079 |
| 80 | 3 | 90.9 | 3 | 3.579 | 0.118 |
| 100 | 4 | 116.3 | 3 | 4.579 | 0.118 |
| 125 | 5 | 141.7 | 3 | 5.579 | 0.118 |
| 150 | 6 | 170.3 | 3 | 6.705 | 0.118 |
| 200 | 8 | 221.1 | 3 | 8.705 | 0.118 |

## Design

*Connections*
Available with the following connections:

- Butt-weld connection "F"
  DN 15 to 65 size: 2mm thick
  DN 80 -200 size: 3 mm thick

*Strainer Insert*
A filter grid and filter net of stainless steel ensure long element life. The filter net offers a very high degree of cleanability.

*Housing*
The strainer housing is made of special, cold resistant steel.

*Installation/Maintenance*
The strainer is designed to resist high internal pressures. However, the piping system in general should be designed to avoid liquid traps and reduce the risk of hydraulic pressure caused by thermal expansion.
Install the strainer with the cover in downward position.

Danfoss recommends replacement/cleaning of the strainer when the differential pressure loss >0.5 bar (7.3 psi) in the liquid line and >0.05 bar (0.7 psi) in the suction line. The max. permissible differential pressure is 1 bar (15 psi).

For further information refer to installation instruction for FIA.

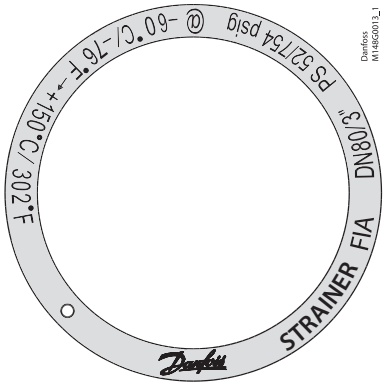

*Example of marking ring, FIA*

*Pressure Equipment Directive (PED)*
FIA strainers are approved in accordance with the European standard specified in the Pressure Equipment Directive and are CE marked.
For further details / restrictions - see Installation Instruction.

| | | | |
|---|---|---|---|
| **Nominal bore** | DN ≤ 25 (1 in.) | DN 32-80 mm (1 1/4 - 3 in.) | DN 100-200 mm (4-8 in.) |
| **Classified for** | Fluid group I | | |
| **Category** | Article 3, paragraph 3 | II | III |

## Selection of strainer size

The mesh aperture size of the strainer must satisfy the requirements stated by the suppliers of the equipment to be protected.

The following recommendations of aperture size apply in general to refrigeration installations:

*All lines*
First start up: ..... **50**µ
(Use strainer element with removable insert for FIA DN15-40 or separate filter bag for FIA DN 50-200. 50µ insert should normally be removed after the first 24 hours of operation)

*Liquid Lines*
Ahead of pumps: ..... **500**µ [38 mesh]
After pumps: ..... **150**µ [100 mesh] / 250µ [72 mesh]
In front of AKVA valves ..... **100**µ [150 mesh]

*Protection of automatic regulation equipment*
Generally ..... **150**µ [100 mesh] / 250µ [72 mesh]
Sensitive equipment, e.g.
suction regulators with low temperature ..... **250**µ [72 mesh]

*Suction Lines*
Ahead of screw compressor ..... **250**µ [72 mesh]
Ahead of piston compressor ..... **150**µ [100 mesh]

*Definition*
Mesh is the number of threads per inch.
µ (microns) is the distance between two threads (1µ = 1 /1000 mm).

*Flow coefficient (DIN/ANSI)*

| Connection size (DN) FIA | µ | mesh | wire mm | wire in. | free space % | screen area Plain elements cm² | Plain elements in² | Pleated elements cm² | Pleated elements in² |
|---|---|---|---|---|---|---|---|---|---|
| 15 - 20 (1/2" - 3/4") | 100 | | 0.068 | 0.003 | 35 | 25 | 3.9 | 45 | 7.0 |
| | 150 | 100 | 0.10 | 0.004 | 36 | 25 | 3.9 | 45 | 7.0 |
| | 250 | 72 | 0.10 | 0.004 | 51 | 25 | 3.9 | 45 | 7.0 |
| | 500 | 38 | 0.16 | 0.006 | 57.6 | 25 | 3.9 | 45 | 7.0 |
| 25 - 40 (1" - 1 1/2") | 100 | | 0.068 | 0.003 | 35 | 71 | 11 | 160 | 25.0 |
| | 150 | 100 | 0.10 | 0.004 | 36 | 71 | 11 | 160 | 25.0 |
| | 250 | 72 | 0.10 | 0.004 | 51 | 71 | 11 | 160 | 25.0 |
| | 500 | 38 | 0.16 | 0.006 | 57.6 | 71 | 11 | 160 | 25.0 |
| 50 (2") | 100 | | 0.068 | 0.003 | 35 | 71 | 11 | 200 | 31.2 |
| | 150 | 100 | 0.10 | 0.004 | 36 | 87 | 13.5 | 200 | 31.2 |
| | 250 | 72 | 0.10 | 0.004 | 51 | 87 | 13.5 | 200 | 31.2 |
| | 500 | 38 | 0.16 | 0.006 | 57.6 | 87 | 13.5 | 200 | 31.2 |
| 65 (2 1/2") | 150 | 100 | 0.10 | 0.004 | 36 | 127 | 19.7 | 305 | 47.6 |
| | 250 | 72 | 0.10 | 0.004 | 51 | 127 | 19.7 | 305 | 47.6 |
| | 500 | 38 | 0.16 | 0.006 | 57.6 | 127 | 19.7 | 305 | 47.6 |
| 80 (3") | 150 | 100 | 0.10 | 0.004 | 36 | 205 | 31.8 | 450 | 70.2 |
| | 250 | 72 | 0.10 | 0.004 | 51 | 205 | 31.8 | 450 | 70.2 |
| | 500 | 38 | 0.16 | 0.006 | 57.6 | 205 | 31.8 | 450 | 70.2 |
| 100 (4") | 150 | 100 | 0.10 | 0.004 | 36 | 370 | 57.4 | 790 | 123.2 |
| | 250 | 72 | 0.10 | 0.004 | 51 | 370 | 57.4 | 790 | 123.2 |
| | 500 | 38 | 0.16 | 0.006 | 57.6 | 370 | 57.4 | 790 | 123.2 |
| 125 (5") | 150 | 100 | 0.10 | 0.004 | 36 | 510 | 79.1 | 1105 | 172.4 |
| | 250 | 72 | 0.10 | 0.004 | 51 | 510 | 79.1 | 1105 | 172.4 |
| | 500 | 38 | 0.16 | 0.006 | 57.6 | 510 | 79.1 | 1105 | 172.4 |
| 150 (6") | 150 | 100 | 0.10 | 0.004 | 36 | 726 | 112.5 | 1600 | 249.6 |
| | 250 | 72 | 0.10 | 0.004 | 51 | 726 | 112.5 | 1600 | 249.6 |
| | 500 | 38 | 0.16 | 0.006 | 57.6 | 726 | 112.5 | 1600 | 249.6 |
| 200 (8") | 150 | 100 | 0.10 | 0.004 | 36 | 1315 | 203.8 | | |
| | 250 | 72 | 0.10 | 0.004 | 51 | 1315 | 203.8 | | |
| | 500 | 38 | 0.16 | 0.006 | 57.6 | 1315 | 203.8 | | |

## Selection of strainer size
*(Continued)*

*$K_v$ values*

| DN | FIA angle - plain filter net | | | | FIA angle - pleated filter net | | |
|---|---|---|---|---|---|---|---|
| | µ100 | µ150 | µ250 | µ500 | µ150 | µ250 | µ500 |
| 15 | 3.3 | 3.4 | 3.5 | 3.7 | 4.2 | | |
| 20 | 6.9 | 7.1 | 7.3 | 7.7 | 8.8 | | |
| 25 | 13.8 | 14.0 | 14.5 | 15.2 | 17.2 | 17.9 | |
| 32 | 23.0 | 23.8 | 24.7 | 25.5 | 29.2 | 30.5 | |
| 40 | 25.1 | 25.5 | 26.4 | 28.1 | 31.4 | 32.6 | |
| 50 | 45.1 | 45.9 | 47.6 | 50.2 | 56.7 | 58.8 | 62.0 |
| 65 | | 56.1 | 57.8 | 60.4 | 69.3 | 71.4 | 74.6 |
| 80 | | 104.6 | 108.0 | 113.1 | 129.2 | 133.4 | 139.7 |
| 100 | | 162.4 | 167.5 | 176.0 | 200.6 | 206.9 | 217.4 |
| 125 | | 275.4 | 283.9 | 298.4 | 340.2 | 350.7 | 368.6 |
| 150 | | 362.1 | 373.2 | 391.9 | 447.3 | | |
| 200 | | 572.9 | 590.8 | 620.5 | | | |

| DN | FIA straight - plain filter net | | | | FIA straight - pleated filter net | | |
|---|---|---|---|---|---|---|---|
| | µ100 | µ150 | µ250 | µ500 | µ150 | µ250 | µ500 |
| 15 | 2.5 | 2.6 | 2.7 | 2.8 | 3.3 | | |
| 20 | 5.3 | 5.4 | 5.6 | 5.9 | 6.9 | | |
| 25 | 10.5 | 10.7 | 11.1 | 11.6 | 13.8 | 14.5 | |
| 32 | 17.6 | 18.2 | 18.9 | 19.5 | 23.9 | 24.7 | |
| 40 | 19.2 | 19.5 | 20.2 | 21.5 | 25.5 | 26.4 | |
| 50 | 34.5 | 35.1 | 36.4 | 38.4 | 45.9 | 47.6 | 50.2 |
| 65 | | 42.9 | 44.2 | 46.2 | 56.1 | 57.8 | 60.4 |
| 80 | | 80.0 | 82.6 | 86.5 | 104.6 | 108.0 | 113.1 |
| 100 | | 124.2 | 128.1 | 134.6 | 162.4 | 167.5 | 176.0 |
| 125 | | 210.6 | 217.1 | 228.2 | 275.4 | 283.9 | 298.4 |
| 150 | | 276.9 | 285.4 | 299.7 | 362.1 | | |
| 200 | | 438.1 | 451.8 | 474.5 | | | |

## Material specification

*FIA 15 - 40 (1/2 in. - 1 1/2 in.)*

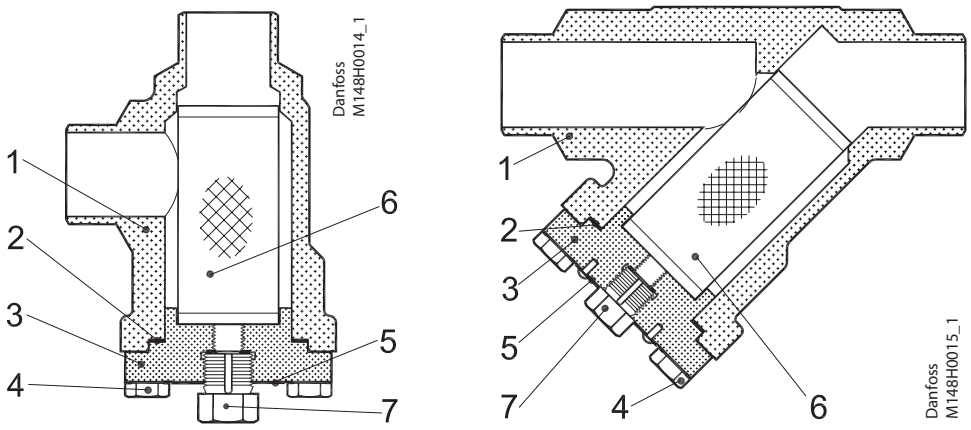


**FIA 15-40** (1/2 in. - 1 1/2 in.)

| No. | Part | Material | DIN | ISO | ASTM |
|---|---|---|---|---|---|
| 1 | Housing | Steel | G20Mn5QT, 10213-3<br>----------<br>P285QH+QT, 10222-4 | | LCC, A352<br>----------<br>LF2, A350 |
| 2 | Gasket | Fibre, Non-asbestos | | | |
| 3 | Cover | Steel | P285QH EN10222-4<br>----------<br>P275NL1 or 2 EN10028-3 | | LF2, A350<br>----------<br>A, A662 |
| 4 | Bolts | Stainless steel | A2-70 | A2-70 | Type 308 |
| 5 | Marking label | Aluminium | | | |
| 6 | Strainer element | Stainless steel | | | |
| 7 | Pressure relief (screw) | Stainless steel | | | |

## Material specification

*FIA 50 - 200 (2 in. - 8 in.)*

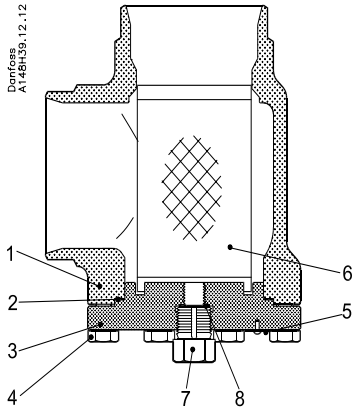


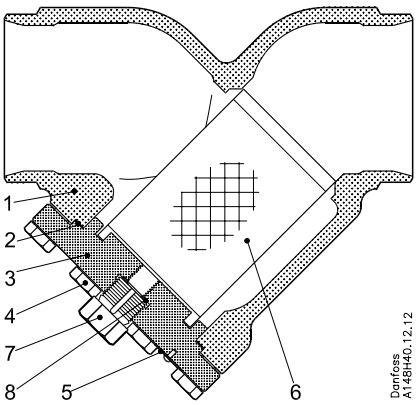


**FIA 50-200** (2 in. - 8 in.)

| No. | Part | Material | DIN | ISO | ASTM |
|---|---|---|---|---|---|
| 1 | Housing | Steel | G20Mn5QT, 10213-3<br>----------<br>P285QH+QT, 10222-4 | | LCC, A352<br>----------<br>LF2, A350 |
| 2 | Gasket | Fibre, Non-asbestos | | | |
| 3 | Cover | Steel | P285QH EN10222-4<br>----------<br>P275NL1 or 2 EN10028-3 | | LF2, A350<br>----------<br>A, A662 |
| 4 | Bolts | Stainless steel | A2-70 | A2-70 | Type 308 |
| 5 | Marking label | Aluminium | | | |
| 6 | Strainer element | Stainless steel | | | |
| 7 | Pressure relief (screw) | Stainless steel | | | |
| 8* | Packing washer | Aluminium | | | |

* pos 8 used in FIA 50-200

## Dimensions and weights

### FIA 15 - 65

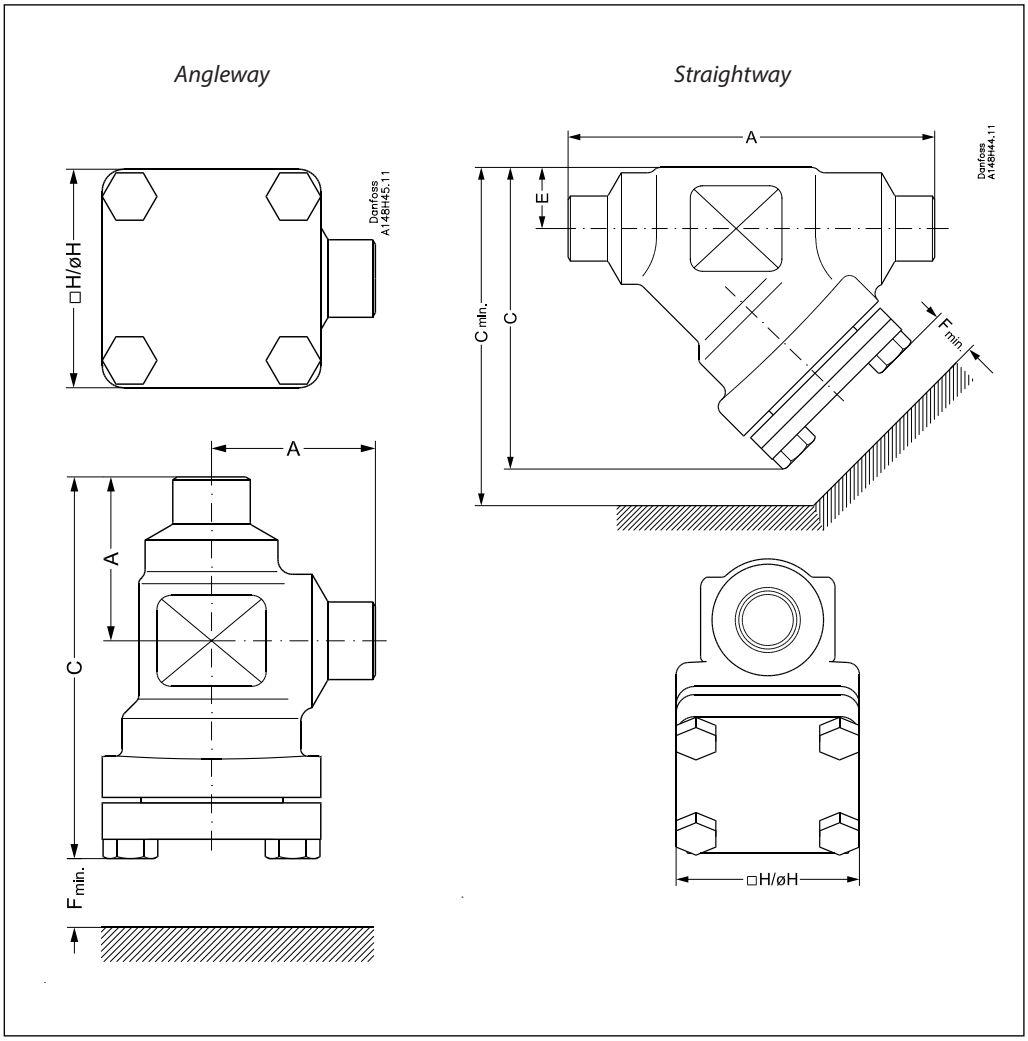


*Angleway*

| Strainer size | | A | C | H | $F_{min.}$ | Weight |
|---|---|---|---|---|---|---|
| FIA 15-20 | mm | 45 | 105 | 60 | 68 | 1.1 kg |
| (1/2" - 3/4") | in. | 1.77 | 4.13 | 2.36 | 2.68 | 2.4 lbs |
| FIA 25-40 | mm | 55 | 132 | 70 | 95 | 1.7 kg |
| (1" - 1 1/2") | in. | 2.17 | 5.20 | 2.76 | 3.74 | 3.7 lbs |
| FIA 50 | mm | 60 | 132 | 77 | 92 | 2.8 kg |
| (2") | in. | 2.36 | 5.20 | 3.03 | 3.62 | 6.2 lbs |
| FIA 65 | mm | 70 | 152 | 90 | 107 | 3.8 kg |
| (2 1/2") | in. | 2.76 | 5.98 | 3.54 | 4.21 | 8.4 lbs |

*Straightway*

| Strainer size | | A | C | $C_{min.}$ | H | E | $F_{min.}$ | Weight |
|---|---|---|---|---|---|---|---|---|
| FIA 15-20 | mm | 120 | 99 | 133 | 60 | 20 | 68 | 1.4 kg |
| (1/2" - 3/4") | in. | 4.72 | 3.90 | 5.24 | 2.36 | 0.79 | 2.68 | 3.1 lbs |
| FIA 25-40 | mm | 155 | 129 | 177 | 70 | 26 | 95 | 2.4 kg |
| (1" - 1 1/2") | in. | 6.10 | 5.08 | 6.97 | 2.76 | 1.02 | 3.74 | 5.3 lbs |
| FIA 50 | mm | 148 | 138 | 184 | 77 | 32 | 92 | 3.5 kg |
| (2") | in. | 5.83 | 5.43 | 7.24 | 3.03 | 1.26 | 3.62 | 7.7 lbs |
| FIA 65 | mm | 176 | 165 | 219 | 90 | 40 | 107 | 5.3 kg |
| (2 1/2") | in. | 6.93 | 6.50 | 8.62 | 3.54 | 1.57 | 4.21 | 11.7 lbs |

## Dimensions and weights

### FIA 80 - 200

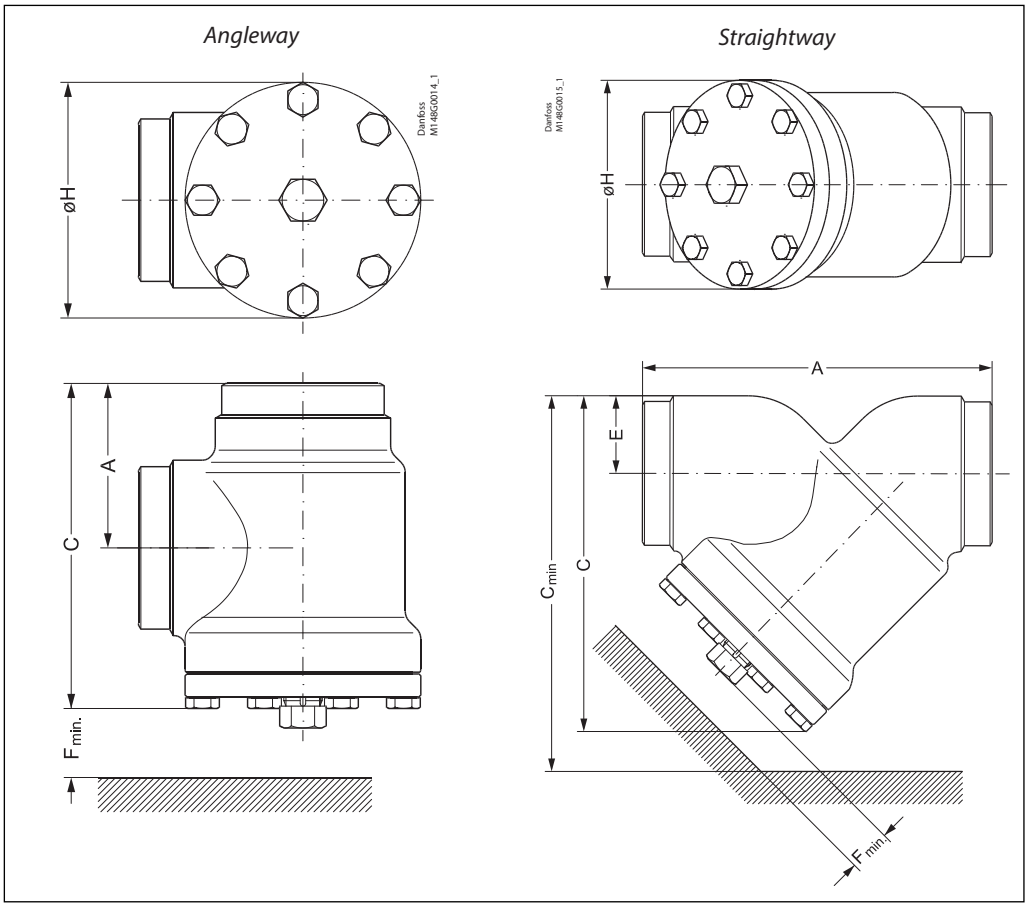


*Angleway*

| Strainer size | | A | C | H | $F_{min.}$ | Weight |
|---|---|---|---|---|---|---|
| FIA 80 | mm | 90 | 189 | 129 | 133 | 7.3 kg |
| (3") | in. | 3.54 | 7.44 | 5.08 | 5.24 | 16.1 lbs |
| FIA 100 | mm | 106 | 223 | 156 | 163 | 11.9 kg |
| (4") | in. | 4.17 | 8.78 | 6.14 | 6.42 | 26.2 lbs |
| FIA 125 | mm | 128 | 268 | 192 | 190 | 21.2 kg |
| (5") | in. | 5.04 | 10.6 | 7.56 | 7.48 | 46.7 lbs |
| FIA 150 | mm | 145 | 303 | 219 | 223 | 30.5 kg |
| (6") | in. | 5.71 | 11.93 | 8.62 | 8.78 | 67.2 lbs |
| FIA 200 | mm | 180 | 372 | 276 | 280 | 68 kg |
| (8") | in. | 7.09 | 14.65 | 10.87 | 11.02 | 150 lbs |

*Straightway*

| Strainer size | | A | C | $C_{min.}$ | H | E | $F_{min.}$ | Weight |
|---|---|---|---|---|---|---|---|---|
| FIA 80 | mm | 216 | 204 | 271 | 129 | 48 | 133 | 8.6 kg |
| (3") | in. | 8.50 | 8.03 | 10.67 | 5.08 | 1.89 | 5.24 | 19 lbs |
| FIA 100 | mm | 264 | 256 | 337 | 156 | 60 | 163 | 14.9 kg |
| (4") | in. | 10.39 | 10.08 | 13.27 | 6.14 | 2.36 | 6.42 | 32.8 lbs |
| FIA 125 | mm | 322 | 313 | 408 | 192 | 74 | 190 | 26.9 kg |
| (5") | in. | 12.68 | 12.32 | 16.06 | 7.56 | 2.91 | 7.48 | 59.3 lbs |
| FIA 150 | mm | 370 | 370 | 482 | 219 | 91 | 223 | 51 kg |
| (6") | in. | 14.57 | 14.57 | 18.98 | 8.62 | 3.58 | 8.78 | 112 lbs |
| FIA 200 | mm | 464 | 465 | 605 | 276 | 117 | 280 | 95 kg |
| (8") | in. | 18.27 | 18.31 | 23.82 | 10.87 | 4.61 | 11.02 | 209 lbs |

## Ordering

The table below is used to identify the strainer required. Please note that you have to order **FIA strainer without element, a strainer element** and **accessories.**

*Example:*
FIA 150 F ANG + FIA-X 150 150µ Strainer Element + Filter Bag = **148B6442** + **148H3134** + **148H3155**

| Size mm | Size in. | Type | FIA Without Strainer Element | Strainer Element 100µ 150 mesh | Strainer Element 150µ 100 mesh | Strainer Element 250µ 72 mesh | Strainer Element 500µ 38 mesh | Pleated Strainer element 150µ 100 mesh | Pleated Strainer element 250µ 72 mesh | Pleated Strainer element 500µ 38 mesh |
|---|---|---|---|---|---|---|---|---|---|---|
| *Butt-weld F connection - Angleway* | | | | | | | | | | |
| 150 | 6 | FIA 150 F ANG | **148B6442** | - | **148H3134** | **148H3142** | **148H3148** | **148H3226** | - | - |
| 200 | 8 | FIA 200 F ANG | **148B6443** | - | **148H3135** | **148H3143** | **148H3149** | **148H3297** | - | - |
| *Butt-weld F connection - Straightway* | | | | | | | | | | |
| 150 | 6 | FIA 150 F STR | **148B6444** | - | **148H3134** | **148H3142** | **148H3148** | **148H3226** | - | - |
| 200 | 8 | FIA 200 F STR | **148B6445** | - | **148H3135** | **148H3143** | **148H3149** | **148H3297** | - | - |

F = Butt-weld F
ANG = Angleway
STR = Straightway

*Accessories*

| Part | Accessory for | **Code number** |
|---|---|---|
| Magnet insert | FIA 65-100 | **148H3447** |
| | FIA 125-200 | **148H3448** |

| Part | Accessory for | **Code number** |
|---|---|---|
| Strainer element µ150 with removable element µ50 for the first start up | FIA 15-20 | **148H3301** |
| | FIA 25-40 | **148H3302** |

| Part | Accessory for | **Code number** |
|---|---|---|
| Filter bag | FIA 50 | **148H3150** |
| | FIA 65 | **148H3151** |
| | FIA 80 | **148H3152** |
| | FIA 100 | **148H3153** |
| | FIA 125 | **148H3154** |
| | FIA 150 | **148H3155** |
| | FIA 200 | **148H3156** |

| Part | Accessory for | **Code number** |
|---|---|---|
| Purge valve complete | FIA 50 - 300 | **148B3745** |
| Blind nut with gasket | | **148H3450** |

## Ordering FIA strainers from the parts programme

***Example***
*(select from table 1 and 2)*

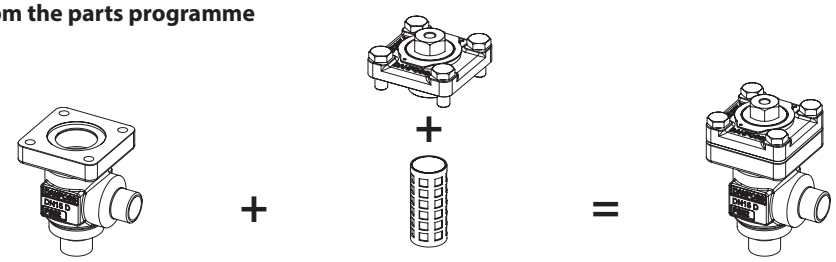

Strainer Housing, size 25 (1 in.), butt weld F, angleway,
**148B6416**
Table 1

+

Top part, FIA, size 25 (1 in.)
**148B5484**
+
Strainer insert, 250µ, 72 mesh
**148H3127**
*Table 2*

***Table 1***
*SVL valve housings w/different connections*

| | *DN 15-65 mm (½ - 2½ in.)* | *DN 80-125 mm (3 - 5 in.)* |
|---|---|---|
| | 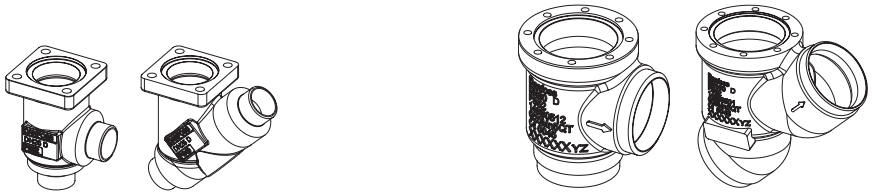 | |

| Sizes [DN] | | Valve Housing SVL | |
|---|---|---|---|
| | | Butt weld F | |
| **mm** | **in.** | **ANG** | **STR** |
| 15 | ½ | **148B6414** | **148B6424** |
| 20 | ¾ | **148B6415** | **148B6425** |
| 25 | 1 | **148B6416** | **148B6426** |
| 32 | 1¼ | **148B6417** | **148B6427** |
| 40 | 1½ | **148B6418** | **148B6428** |
| 50 | 2 | **148B6419** | **148B6429** |
| 65 | 2½ | **148B6420** | **148B6430** |
| 80 | 3 | **148B6421** | **148B6431** |
| 100 | 4 | **148B6422** | **148B6432** |
| 125 | 5 | **148B6423** | **148B6433** |

***Table 2***
*FIA complete top part including gaskets and bolts*

| | | FIA 15-65 | FIA 80-125 | | | | | | | | |
|---|---|---|---|---|---|---|---|---|---|---|---|
| | | 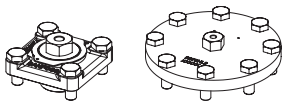 | | | 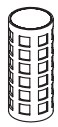 | | | | | | |
| **Sizes [DN]** | | **Complete top part FIA** | | | Strainer Element 100µ 150 mesh | Strainer Element 150µ 100 mesh | Strainer Element 250µ 72 mesh | Strainer Element 500µ 38 mesh | Pleated Strainer element 150µ 100 mesh | Pleated Strainer element 250µ 72 mesh | Pleated Strainer element 500µ 38 mesh |
| **mm** | **in.** | | | | | | | | | | |
| 15 | ½ | **148B5284** | | + | **148H3122** | **148H3124** | **148H3126** | **148H3128** | **148H3303** | - | - |
| 20 | ¾ | | | | | | | | | | |
| 25 | 1 | **148B5484** | | + | **148H3123** | **148H3125** | **148H3127** | **148H3129** | **148H3304** | **148H3269** | - |
| 32 | 1¼ | | | | | | | | | | |
| 40 | 1½ | | | | | | | | | | |
| 50 | 2 | **148B5748** | | + | **148H3157** | **148H3130** | **148H3138** | **148H3144** | **148H3179** | **148H3184** | **148H3189** |
| 65 | 2½ | **148B5832** | | + | - | **148H3131** | **148H3139** | **148H3145** | **148H3180** | **148H3185** | **148H3190** |
| 80 | 3 | **148B5922** | | + | - | **148H3119** | **148H3120** | **148H3121** | **148H3181** | **148H3186** | **148H3191** |
| 100 | 4 | **148B6024** | | + | - | **148H3132** | **148H3140** | **148H3146** | **148H3182** | **148H3187** | **148H3192** |
| 125 | 5 | **148B6122** | | + | - | **148H3133** | **148H3141** | **148H3147** | **148H3183** | **148H3188** | **148H3193** |

## Hand regulating valves REG-SA and REG-SB

REG-SA and REG-SB are angleway and straightway hand regulating valves, which act as normal stop valves in closed position.

The valves are available in two different versions – REG-SA and REG-SB designed for regulation purposes in liquid and expansion lines.

The valves are designed to meet the strict quality requirements on refrigerating installations specified by the international classification societies and are carefully designed to present favourable flow conditions and accurate linear characteristics.

REG-SA and REG-SB are equipped with vented cap and internal backseating enables replacement of the spindle seal whilst the valve is active, i.e. under pressure.

## Features REG-SA and REG-SB

- Modular Concept:
  - Each valve housing is available with butt-weld F connection and in several different sizes.
  - Possible to convert REG-SA or REG-SB to any other product in the FlexlineTM SVL family (shut-off valve, check & stop valve, check valve or strainer) just by replacing the complete top part.
- Fast and easy valve overhaul service. It is easy to replace the top part and no welding is needed.
- Designed to ensure perfect regulation
- Internal backseating enables replacement of the spindle seal whilst the valve is active, i.e. under pressure.
- Easy to disassemble for inspection and possible repair.
- Long neck versions (DN 15 to DN 40) for insulated systems available from parts programme.
- Acts as a normal stop valve in closed position.
- Housing and bonnet material is low temperature steel according to requirements of the Pressure Equipment Directive and other international classification authorities.
- Exact capacity and setting of the valve can be calculated for all refrigerants by means of "DIR-calc™" (Danfoss Industrial Refrigeration calculation programme).
- Classification: DNV, CRN, BV, EAC etc.
  To get an updated list of certification on the products please contact your local Danfoss Sales Company.

## Technical data

- *Refrigerants*
  Applicable to HCFC, HFC, R717 (Ammonia) and R744 (CO2). For further information refer to the product instruction for REG-SA and REG-SB.
- *Temperature range*
  –60/+150°C (–76/+302°F).
- *Max. working pressure*
  52 bar g (754 psi g)

  For more detail on pressure and temperature range; please see page 3.

## Connections

**F**

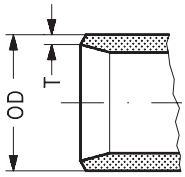


*Butt-weld connection type F*

| Size mm | Size in. | OD mm | T mm | OD in. | T in. | Cone |
|---|---|---|---|---|---|---|
| 15 | ½ | 21.3 | 2 | 0.839 | 0.079 | A and B |
| 20 | ¾ | 26.9 | 2 | 1.059 | 0.079 | |
| 25 | 1 | 33.7 | 2 | 1.327 | 0.079 | A and B |
| 32 | 1¼ | 42.4 | 2 | 1.669 | 0.079 | |
| 40 | 1½ | 48.3 | 2 | 1.902 | 0.079 | |
| 50 | 2 | 60.3 | 2 | 2.37 | 0.079 | B |
| 65 | 2½ | 76.1 | 2 | 3 | 0.079 | B |

## Design

*Housing*
Housing is Standard SVA angleway or straightway housing allowing other inserts from the SVL platform to be installed.
Material is special, cold resistant steel

*Connections*
Available with the following connections:
- Butt-weld connection "F"
  DN 15 to 65 size: 2mm thick

*The cone*
The valves are available in two different versions – REG-SA with an A cone and REG-SB with a B cone. The A cone is designed for expansion lines, while the B cone is designed for regulating purposes e.g. liquid lines.

The valve cone is designed to ensure perfect regulation and provide an extensive regulating area. Irrespective of the refrigerant used, it is easy to obtain the correct capacity. A cone seal ring provides perfect sealing at a minimum closing momentum.

The valve cone can be turned on the spindle, thus there will be no friction between the cone and the seat when the valve is opened and closed.
*Spindle*
The spindle is made of polished stainless steel, which is ideal for O-ring sealing.

*Packing gland - REG-SA and REG-SB*
The "full temperature range" packing gland ensures perfect tightness in the whole range: –60/+150°C (–76/+302°F). The packing glands are equipped with a scraper ring to prevent penetration of dirt and ice.

*Installation*
Install the valve with the spindle up or in horizontal position. The flow must be directed towards the cone.

The valve is designed to withstand high internal pressure. However, the piping system in general should be designed to avoid liquid traps and reduce the risk of hydraulic pressure caused by thermal expansion.

For further information refer to product instruction for REG-SA and REG-SB.

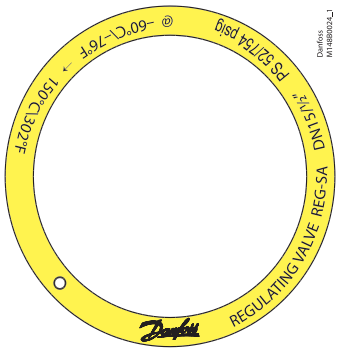

*Example of marking ring, REG-SA*

*Pressure Equipment Directive (PED)*
REG valves are approved according to the European standard specified in the Pressure Equipment Directive and are CE marked.

| REG-SA and REG-SB valves | | |
|---|---|---|
| Nominal bore | DN = < 25 mm (1 in.) | DN32-65 mm (1¼ - 2½ in.) |
| Classified for | Fluid group I | |
| Category | Article 3, paragraph 3 | II |

## Computation and selection

*Introduction*
In refrigeration plants, regulating valves are primarily used in liquid lines in order to regulate the flow of refrigerant. The valves can, however, also be used as expansion valves. From a calculation point of view the two fields of application are very different.

Normal flow is the term used to describe the general case where the flow through the valve is proportional to the square root of the pressure drop across it and inversely proportional to the density of the refrigerant (Bernouillis equation).

This relationship between mass flow, pressure drop and density satisfies the majority of all valve applications with refrigerants and brines.

Normal flow is characterised by turbulent flow through the valve without any phase change. The following capacity curves are based on the above mentioned assumption.

Application of the regulating valves outside the normal flow area will reduce the capacity of the valve considerably. In such cases it is recommended to use "DIRcalc™" (Danfoss Industrial Refrigeration calculation programme).

Location of valve in system (marked with grey)

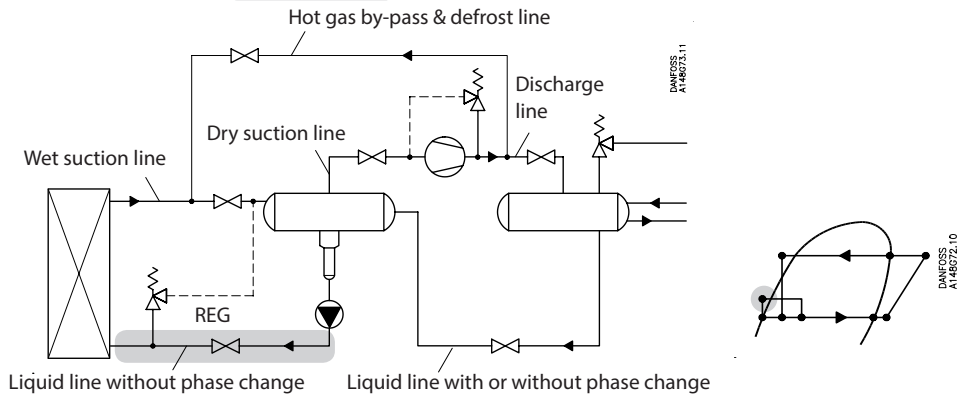


*Sizing regulating valve for liquid flow*
Liquid refrigerants: Use the liquid tables, fig. 6 - 10. For other refrigerants and brines, "Normal flow" (Turbulent flow); see below and use the flow coefficient tables (fig. 1 - 5).

***SI-units***

Mass flow:

$$k_v = \frac{G}{\sqrt{\rho \times 1000 \times \Delta p}} = G \times C_A \, [m^3/h]$$

Volume flow:

$$k_v = \frac{\dot{V}}{\sqrt{\frac{1000 \times \Delta p}{\rho}}} \, [m^3/h]$$

***Imperial units***

Mass flow:

$$C_v = \frac{0.95 \times G}{\sqrt{\rho \times \Delta p}} = 31.6 \times G \times C_A \, [USgal/min.]$$

Volume flow:

$$C_v = \frac{0.127 \times \dot{V}}{\sqrt{\frac{\Delta p}{\rho}}} \, [USgal/min.]$$

| | | |
|---|---|---|
| $k_v$ | [m³/h] | Quantity [m³/h] of water flowing through a valve at a pressure loss of 1 bar (according to VDE/VDI Norm 2173). |
| $P_1$ | [bar] | Pressure before the valve (upstream). |
| $P_2$ | [bar] | Pressure after the valve (downstream). |
| $\Delta p$ | [bar] | Actual pressure loss across the valve ($P_1$–$P_2$). |
| G | [kg/h] | Mass flow through the valve. |
| $\dot{V}$ | [m³/h] | Volume flow through the valve. |
| $\rho$ | [kg/m³] | Density of the refrigerant before the valve. |
| $C_A$ | | Calculation factor (fig. 11). |

| | | |
|---|---|---|
| $C_v$ | [US gal/min] | Quantity [US gal/min] of water flowing through a valve at a pressure loss of 1 psi. |
| $P_1$ | [psi] | Pressure before the valve (upstream). |
| $P_2$ | [psi] | Pressure after the valve (downstream). |
| $\Delta p$ | [psi] | Actual pressure loss across the valve ($P_1$–$P_2$). |
| G | [lb/min] | Mass flow through the valve. |
| $\dot{V}$ | [US gal/min] | Volume flow through the valve. |
| $\rho$ | [lb/ft³] | Density of the refrigerant before the valve |
| $C_A$ | | Calculation factor (fig. 11). |

## Computation and selection

*Flow coefficient*

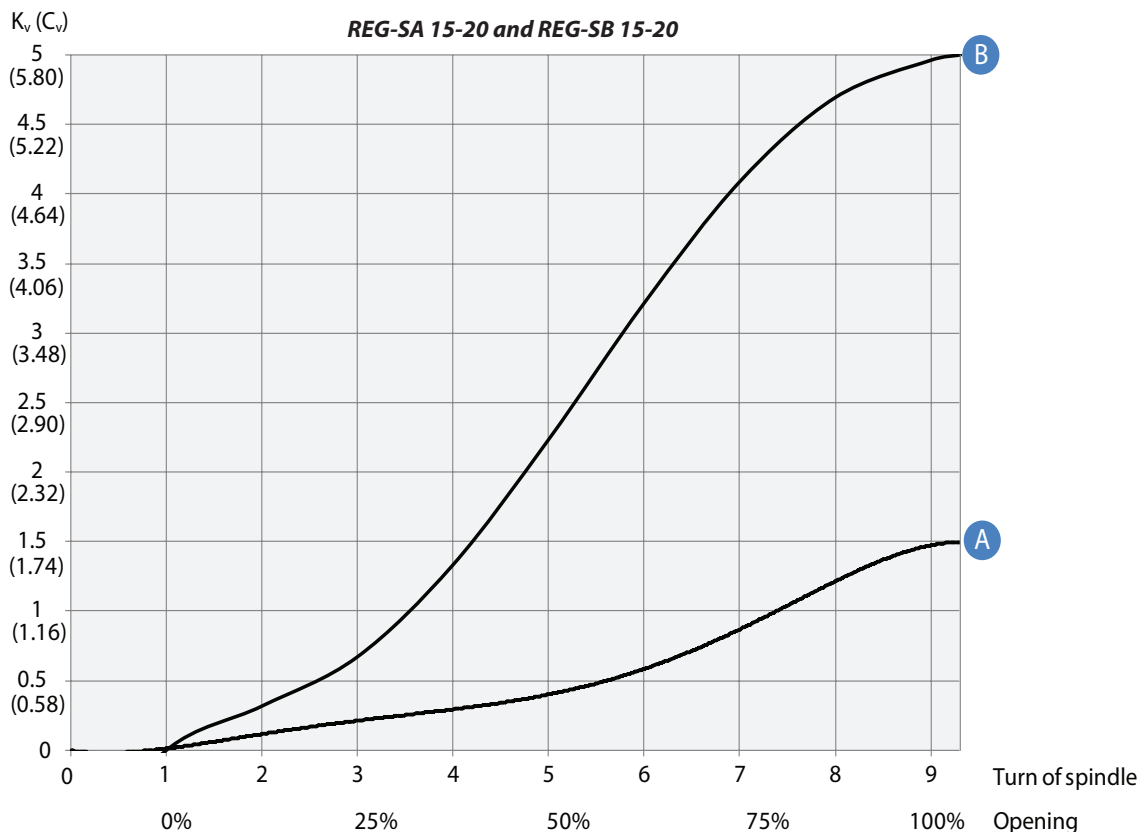


*Fig. 1*

*Flow coefficient*

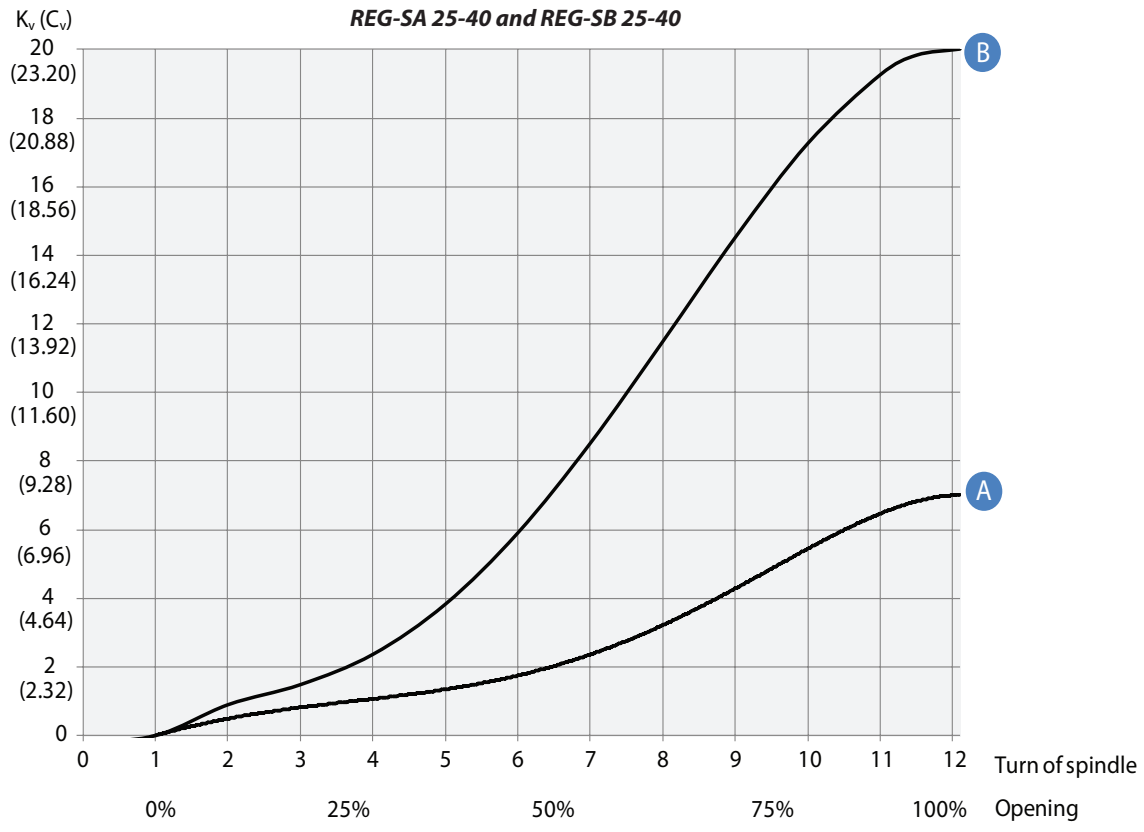


*Fig. 2*

**Computation and selection** *(Continued)*

*Flow coefficient*

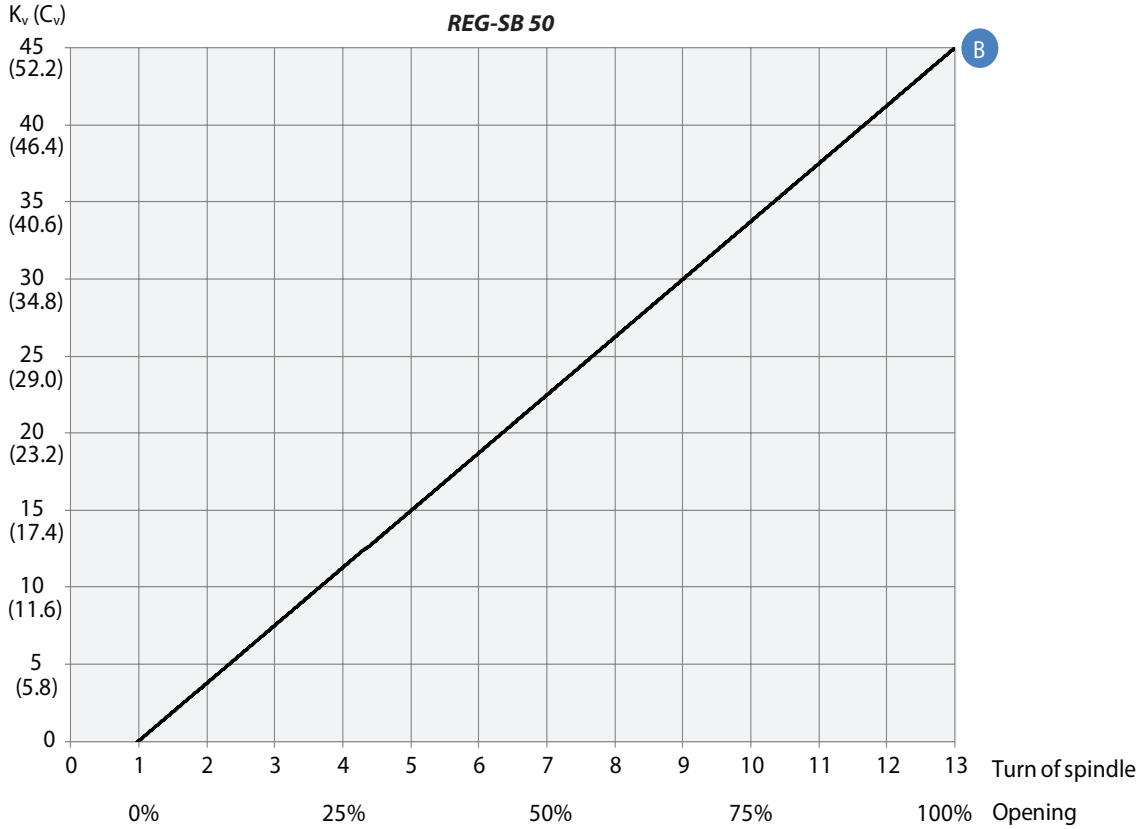


*Fig. 3*

*Flow coefficient*

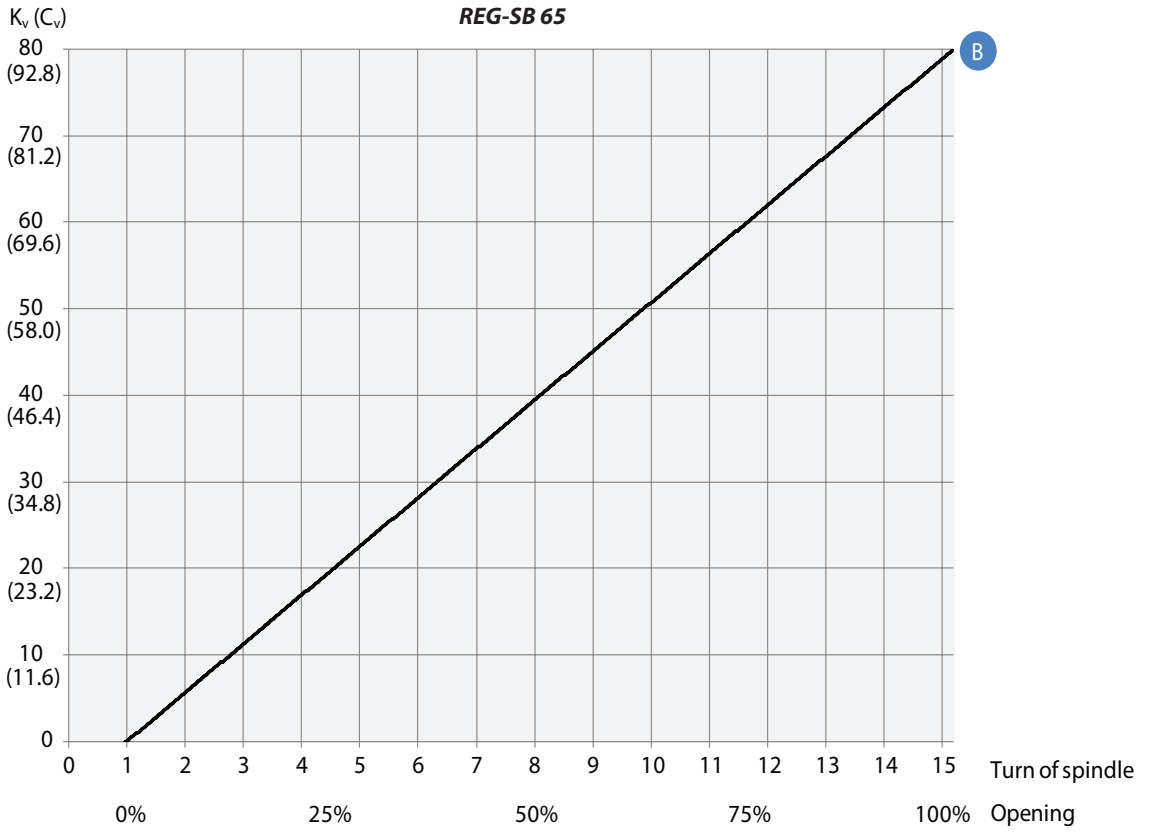


*Fig. 4*

**Computation and selection**
*(Continued)*

*Liquid R 717, density: 670 kg/m³ [42 lb/ft³]*

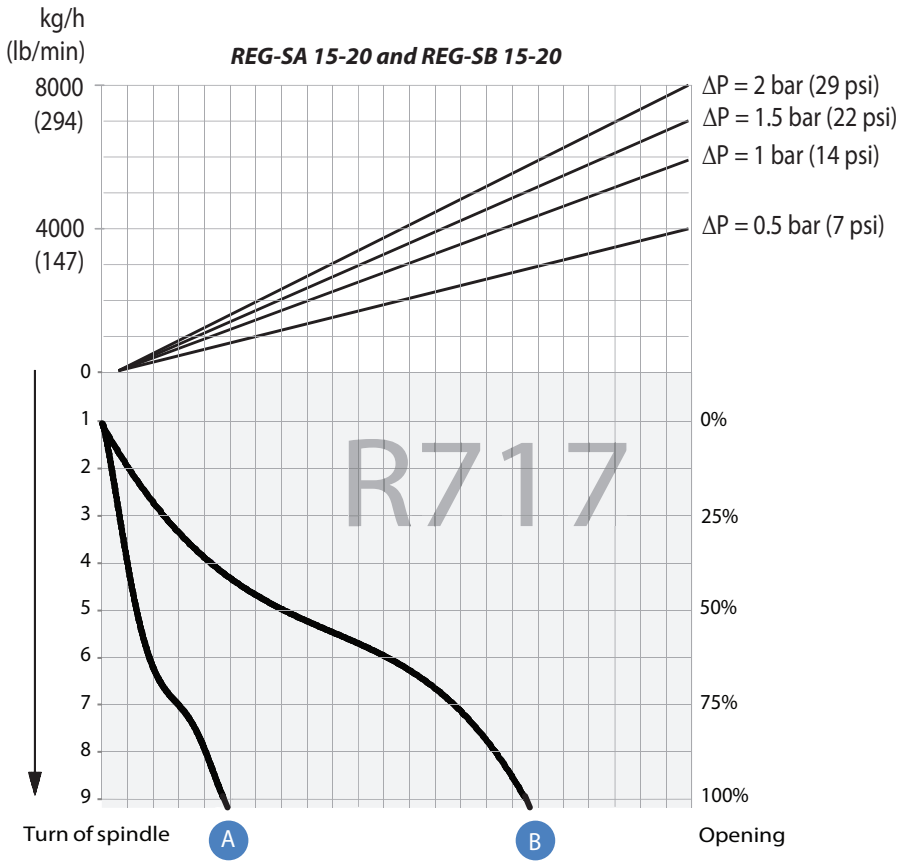


*Fig. 5*

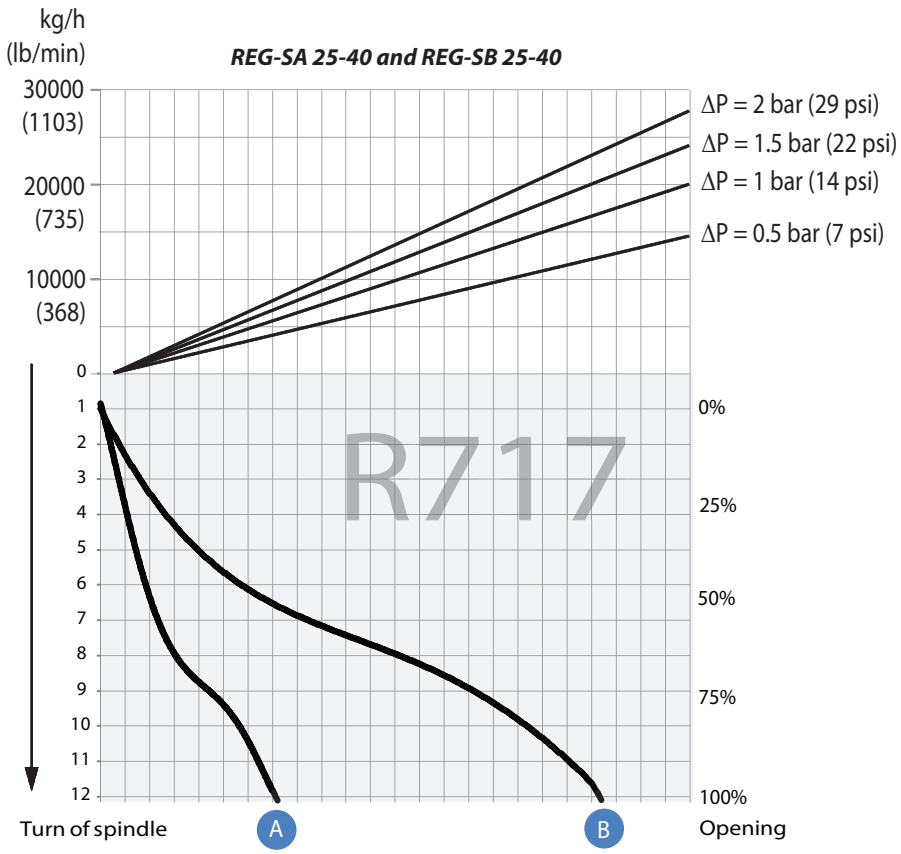


*Fig. 6*

For choice of valve size and connection see "Connections".

**Computation and selection**
*(Continued)*

*Liquid R 717, density: 670 kg/m³ [42 lb/ft³]*

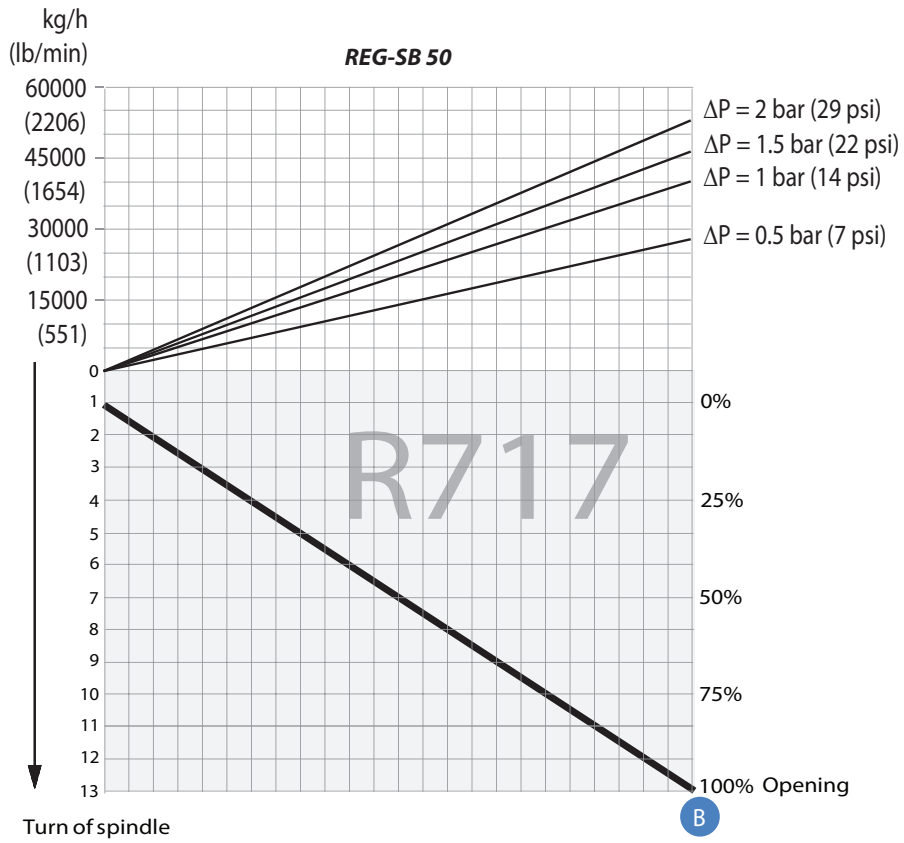


*Fig. 7*

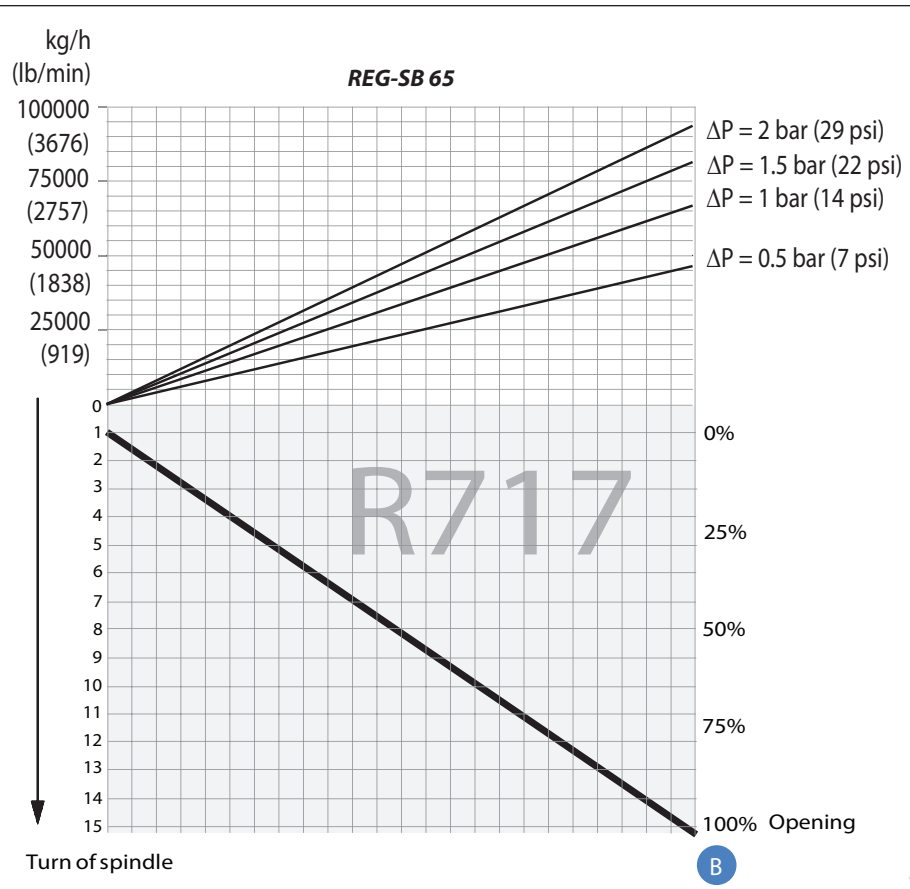


*Fig. 8*

For choice of valve size and connection see "Connections".

**Computation and selection**
*(Continued)*

*Liquid R 717, density: 670 kg/m³ [42 lb/ft³]*

*Calculation factor $C_A$*

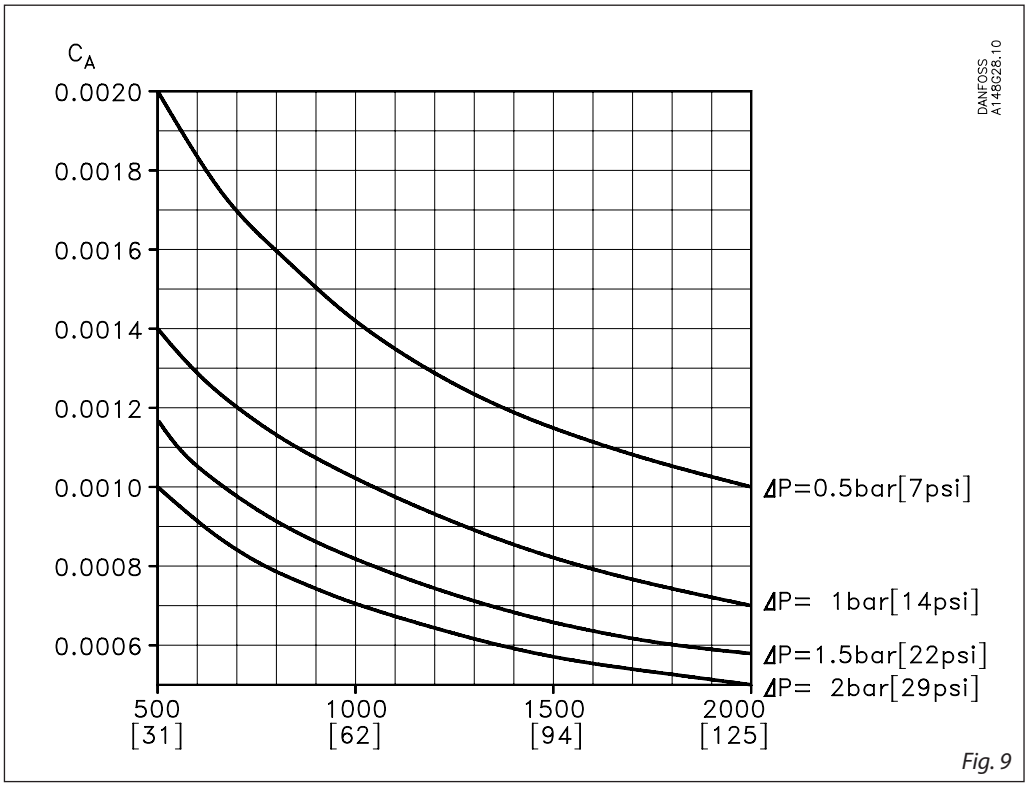


*Fig. 9*

For choice of valve size and connection see "Connections".

**Computation and selection**
*Example 1.*

Refrigerant: R 717
Refrigerant flow: 2200 kg/h
Pressure drop: Δp = 0.5 bar

The above mentioned example is illustrated on the following flow rate diagram and shows that REG-SB 15 and 20 with cone B can be used. The main rule is that nominal regulation range should be below 85% opening degree. If the arrowline is crossing 2 cone curves, the smaller cone should be selected if opening degree < 85%.

The example is only correct if the density of the refrigerant is approx. 670 (kg/m³), and there must be no build-up of flash gas in the valve.

*Flow rate diagram*

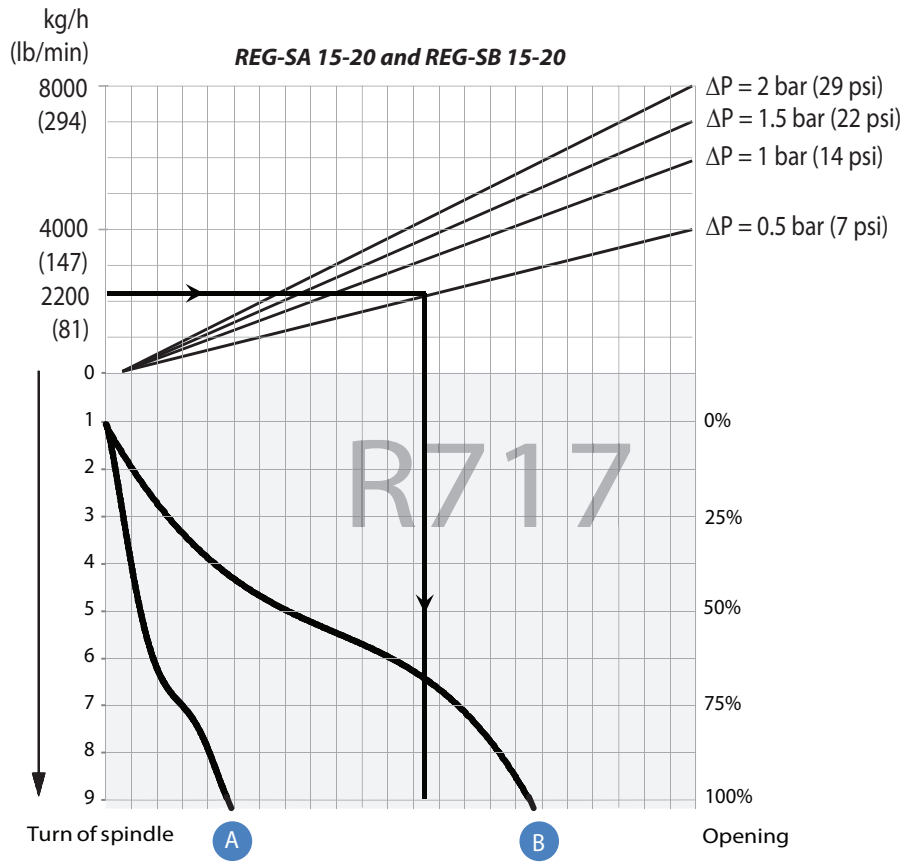


*Fig. 10*

**Computation and selection**
*Example 2.*

| | | | |
|---|---|---|---|
| Brine, density | ρ: | 1150 | [kg/m³] |
| Brine flow | G: | 2,700 | [kg/h] |
| Pressure drop | Δp: | 0.5 | [bar] |

In this example it is not possible to use the selection diagrams (fig. 5 - 8) as the refrigerant in question is not included.

Use the curves of the $k_v$-values instead (fig. 1 - 4) and calculate the required $k_v$ by means of the formulas in the "Introduction" passage at the beginning of this chapter. Alternatively calculate the $k_v$-values by means of the calculation factor $C_A$ (fig. 11) and the flow rate diagram (in this example: fig. 12) as per the following calculation example.

*Calculation example:*

Required $k_v$-value
$C_A$ = 0.00132 (from fig. 18)
$k_v$ = $C_A \times G$
$k_v$ = 0.00132 × 2,700 [kg/h]
= 3.56 [m³/h]

*Calculation factor $C_A$*

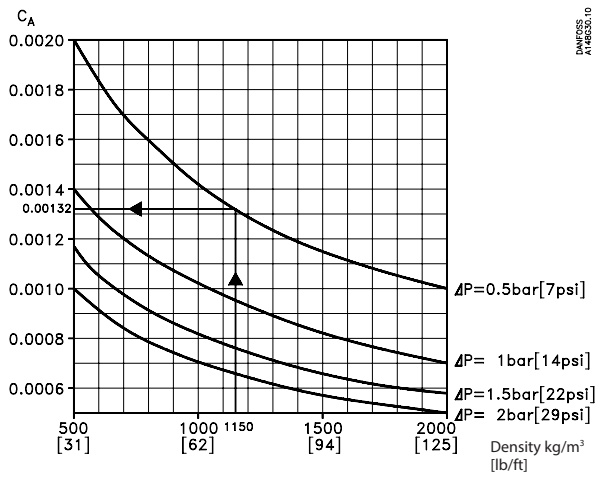


*Fig. 11*

*Flow rate diagram*

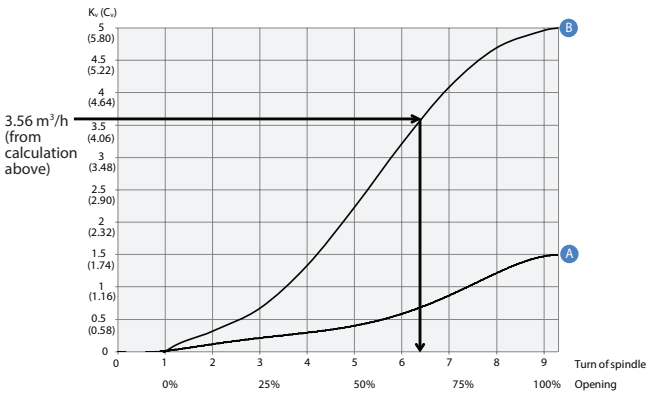


*Fig. 12*

REG-SB 15 and REG-SB 20 with cone B can be used.

## Material specification

*REG-SA and REG-SB 15 - 40*

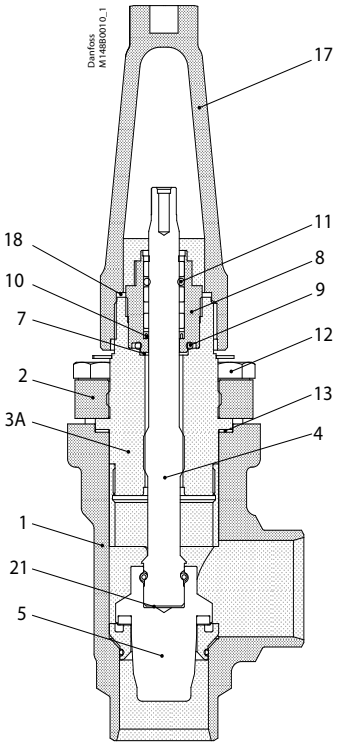


*REG-SA and REG-SB 50 - 65*

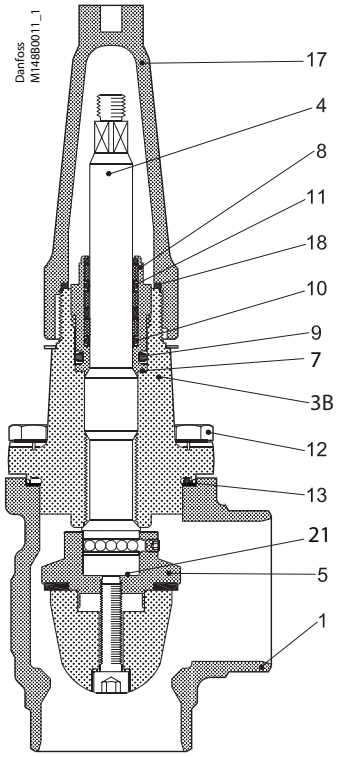


| No. | Part | Material | EN | ISO | ASTM |
|---|---|---|---|---|---|
| 1 | Housing | Steel | G20Mn5QT, 10213-3<br>----------<br>P285QH+QT, 10222-4 | | LCC, A352<br>----------<br>LF2, A350 |
| 2 | DN 15 - 40 (½ - 1½ in.)<br>– Bonnet, Flange | Steel | P275NL1 or 2 EN10028-3 | | A, A662 |
| 3A | DN 15 - 40 ($^3/_8$ - 1½ in.)<br>– Bonnet, Insert | Steel | 11SMn30<br>10087 | Type 2, R 683-9 | 1213<br>SAE J403 |
| 3B | DN 50 - 65 (2 - 2½ in.)<br>– Bonnet, Flange | Steel | P285QH+QT<br>10222-4 | | LF2<br>A350 |
| 4 | Spindle<br>DN 15 - 65 (¼ - 2½ in.) | Stainless steel | X8CrNiS 18-9, 17440 | Type 17, 683/13 | AISI 303 |
| 5 | Cone | Steel | | | |
| 7 | Packing washer | Aluminium | | | |
| 8 | Packing gland | Stainless Steel | X8CrNiS 18-9, 10088 | Type 17, 683/13 | AISI 303 |
| 9 | O-ring | Cloroprene (Neoprene) | | | |
| 10 | Spring loaded Teflon ring | PTFE | | | |
| 11 | O-ring | Cloroprene (Neoprene) | | | |
| 12 | Bolts | Stainless steel | A2-70 | A2-70 | Type 308 |
| 13 | Gasket | Fiber, non asbestos | | | |
| 14 | Bottom insert | Steel | | | |
| 17 | Seal cap | Aluminium | | | |
| 18 | Gasket f. seal cap | Nylon | | | |
| 19 | Locking nut | Steel | | | |
| 20 | Screw | Steel | | | |
| 21 | Disk spring | Steel | | | |

## Dimensions and weights

*REG-SA and REG-SB 15 - 65 in angleway version*

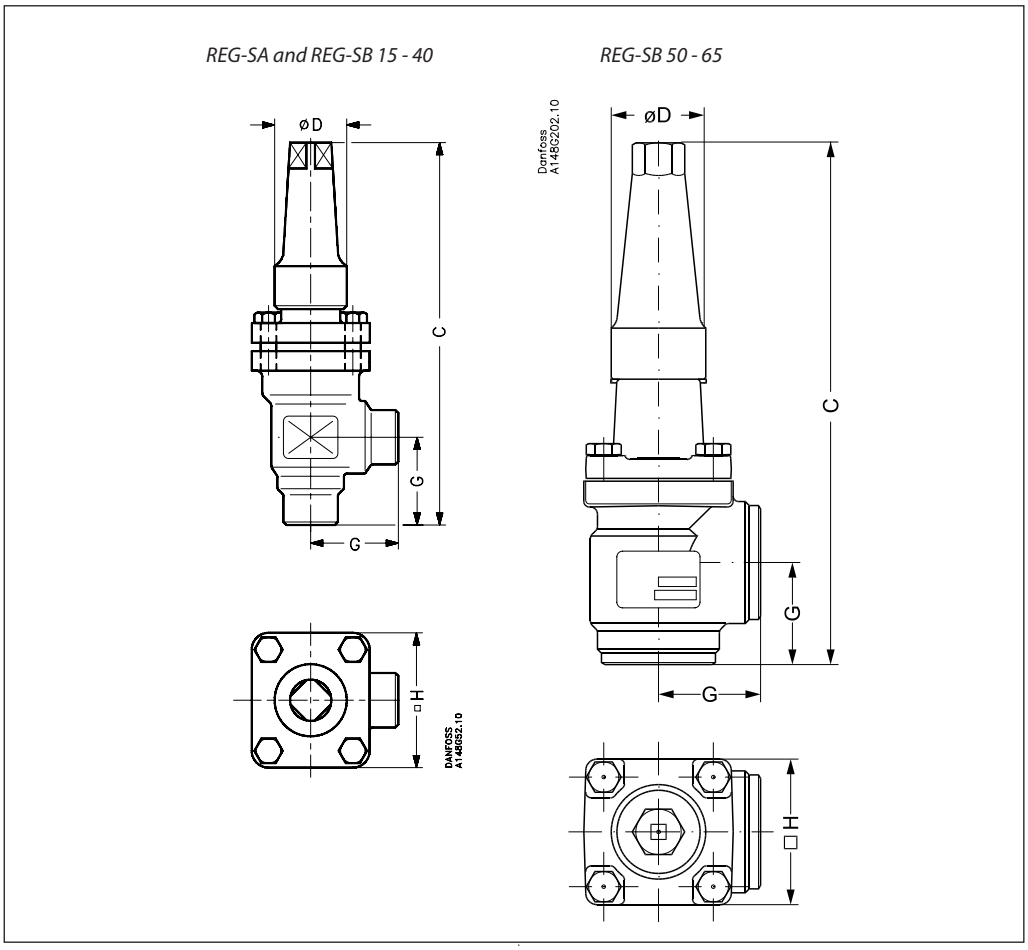


| Valve size | | | C | | G | | ∅D | | □H | | Weight |
|---|---|---|---|---|---|---|---|---|---|---|---|
| REG-SA/SB 15-20 | mm | | 182 | | 45 | | 38 | | 60 | | 1.4 kg |
| REG-SA/SB (½-3/4) | in. | | 7.17 | | 1.77 | | 1.50 | | 2.36 | | 3.1 lb |
| REG-SA/SB 25-40 | mm | | 237 | | 55 | | 50 | | 70 | | 2.4 kg |
| REG-SA/SB (1-1½) | in. | | 9.33 | | 2.17 | | 1.97 | | 2.76 | | 5.3 lb |
| REG-SB 50 | mm | | 315 | | 60 | | 50 | | 77 | | 3.2 kg |
| REG-SB (2 in.) | in. | | 12.4 | | 2.36 | | 1.97 | | 3.03 | | 7.1 lb |
| REG-SB 65 | mm | | 335 | | 70 | | 50 | | 90 | | 4.8 kg |
| REG-SB (2½ in.) | in. | | 13.19 | | 2.76 | | 1.97 | | 3.54 | | 10.6 lb |
| REG-SA/SB 32 SOC | mm | | 275 | | 62 | | 50 | | 70 | | 2.9 kg |
| REG-SA/SB (1¼ in.) SOC | in. | | 10.83 | | 2.44 | | 1.97 | | 2.76 | | 6.4 lb |
| REG-SA/SB 40 SOC | mm | | 275 | | 62 | | 50 | | 70 | | 2.9 kg |
| REG-SA/SB (1½ in.) SOC | in. | | 10.83 | | 2.44 | | 1.97 | | 2.76 | | 6.4 lb |
| REG-SB 50 SOC | mm. | | 320 | | 65 | | 50 | | 77 | | 4.1 kg |
| REG-SB (2 in.) SOC | in. | | 12.60 | | 2.56 | | 1.97 | | 3.03 | | 9.0 lb |

Specified weights are approximate values only.

## Dimensions and weights
*(cont.)*

*REG-SA and REG-SB 15 - 65 in straightway version*

*REG-SA and REG-SB 15 - 40*

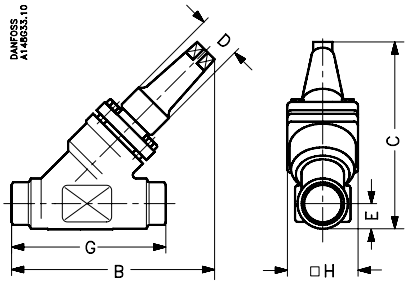


*REG-SB 50-65*

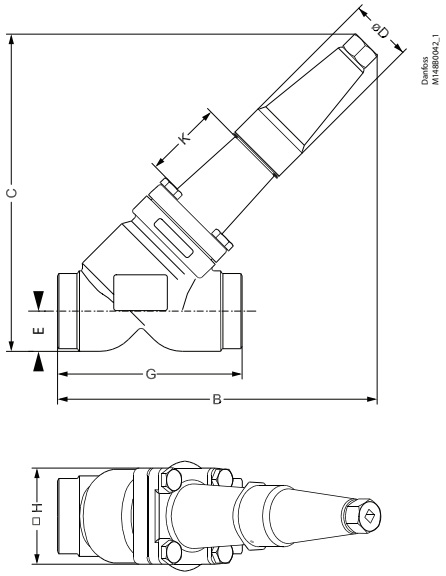


| Valve size | | C | B | E | G | | ∅D | | □H | | Weight |
|---|---|---|---|---|---|---|---|---|---|---|---|
| REG-SA/SB 15-20 | mm | 145 | 155 | 20 | 120 | | 38 | | 60 | | 2.0 kg |
| REG-SA/SB (½-³/₄) | in. | 5.71 | 6.10 | 0.79 | 4.72 | | 1.50 | | 2.36 | | 4.4 lb |
| REG-SA/SB 25-40 | mm | 200 | 215 | 26 | 155 | | 50 | | 70 | | 3.0 kg |
| REG-SA/SB (1-1½) | in. | 7.87 | 8.46 | 1.02 | 6.10 | | 1.97 | | 2.76 | | 6.6 lb |
| REG-SB 50 | mm | 257 | 250 | 32 | 148 | | 50 | | 77 | | 4.2 kg |
| REG-SB (2 in.) | in. | 10.12 | 10.20 | 1.26 | 5.83 | | 1.97 | | 3.03 | | 9.3 lb |
| REG-SB 65 | mm | 280 | 284 | 40 | 176 | | 50 | | 90 | | 6.3 kg |
| REG-SB (2½ in.) | in. | 11.02 | 11.18 | 1.57 | 6.93 | | 1.97 | | 3.54 | | 13.9 lb |
| REG 32 SOC | mm | 209 | 222 | 27.4 | 155 | | 50 | | 70 | | 3.0 kg |
| REG (1¼) SOC | in. | 8.23 | 8.74 | 1.08 | 6.10 | | 1.97 | | 2.76 | | 6.6 lb |
| REG 40 SOC | mm | 213 | 222 | 31.0 | 155 | | 50 | | 70 | | 3.0 kg |
| REG (1½) SOC | in. | 8.39 | 8.74 | 1.22 | 6.10 | | 1.97 | | 2.76 | | 6.6 lb |
| REG-SB 50 SOC | mm | 261 | 266 | 37 | 162 | | 50 | | 77 | | 5.1 kg |
| REG-SB (2 in.) SOC | in. | 10.28 | 10.47 | 1.26 | 6.38 | | 6.38 | | 3.03 | | 11.2 lb |

Specified weights are approximate values only.

## Ordering REG-SA/SB from the parts programme

***Example***
*(select from table 1 and 2)*

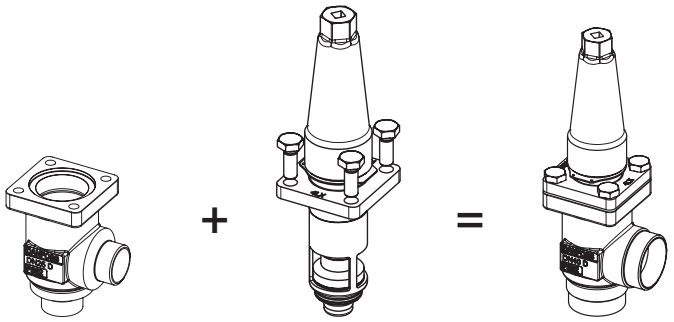

Valve housing, size 25 (1 in.), butt weld F, angleway,
**148B6416**
Table 1

Top part, REG-SA size 25 (1 in.)
**148B5480**
*Table 2*

***Table 1***
*SVL valve housings w/different connections*

| | | *DN 15-65 mm (½ - 2½ in.)* | *DN 80-125 mm (3 - 5 in.)* |
|---|---|---|---|
| | | 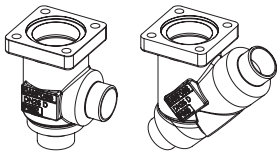 | 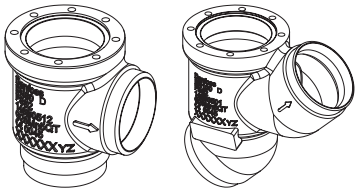 |
| **Sizes [DN]** | | **Valve Housing SVL** | |
| | | **Butt weld F** | |
| **mm** | **in.** | **ANG** | **STR** |
| 15 | ½ | **148B6414** | **148B6424** |
| 20 | ¾ | **148B6415** | **148B6425** |
| 25 | 1 | **148B6416** | **148B6426** |
| 32 | 1¼ | **148B6417** | **148B6427** |
| 40 | 1½ | **148B6418** | **148B6428** |
| 50 | 2 | **148B6419** | **148B6429** |
| 65 | 2½ | **148B6420** | **148B6430** |

***Table 2***
*SVA complete top part including gaskets and bolts*

| | | REG-SA/SB 15-65 | | REG-LA/LB 15-40 | |
|---|---|---|---|---|---|
| | | 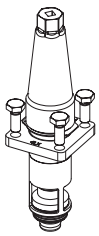 | | 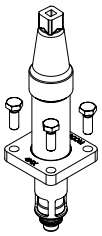 | |
| **Sizes [DN]** | | **Complete top part** | | | |
| **mm** | **in.** | **REG-SA** | **REG-SB** | **REG-LA** | **REG-LB** |
| 15 | ½ | **148B5280** | **148B5281** | **148B6401** | **148B6402** |
| 20 | ¾ | | | | |
| 25 | 1 | **148B5480** | **148B5481** | **148B6403** | **148B6404** |
| 32 | 1¼ | | | | |
| 40 | 1½ | | | | |
| 50 | 2 | | **148B5734** | | |
| 65 | 2½ | | **148B5824** | | |

Danfoss can accept no responsibility for possible errors in catalogues, brochures and other printed material. Danfoss reserves the right to alter its products without notice. This also applies to products already on order provided that such alterations can be made without subsequential changes being necessary in specifications already agreed.
All trademarks in this material are property of the respective companies. Danfoss and the Danfoss logotype are trademarks of Danfoss A/S. All rights reserved.