ENGINEERING
TOMORROW

Catalogue

Shut-off and regulating valves for Industrial Refrigeration

Contents **Page**

Shut-off valves, types SVA-S and SVA-L, 52 bar (754 psi) . . . 3
Shut-off valves, types SVA-S and SVA-L, 65 bar (943 psi) . . . 25
Shut-off valves in stainless steel, type SVA-S SS and SVA-L SS . . . 41
Shut-off valves, types SVA-DL and SVA-DH 250-300 . . . 55
Hand operated regulating valves, types REG-SA and REG-SB, 52 bar (754 psi) . . . 65
Hand operated regulating valves, types REG-SA and REG-SB, 65 bar (943 psi) . . . 87
Hand-operated regulating valves in stainless steel, types REG-SA SS and REG-SB SS . . . 103
Gauge valves, type SNV-ST and SNV-SS . . . 117
Shut-off valve, type QDV 15 . . . 127

ENGINEERING
TOMORROW

Shut-off valves
Types SVA-S and SVA-L, 52 bar (754 psi)

Contents **Page**

Features 5
Design 6
Technical data 7
Connections 7
Material specification 9
Dimensions and weights 15
Ordering 21

AI242886444057en-000201 | 2017.08

ENGINEERING
TOMORROW

Shut-off valves
Types SVA-S and SVA-L, 52 bar (754 psi)

SVA shut-off valves are available in angleway and straightway versions and with Standard neck (SVA-S) and Long neck (SVA-L)

The shut-off valves are designed to meet all industrial refrigeration application requirements and are designed to give favourable flow characteristics and are easy to dismantle and repair when necessary.

The valve cone is designed to ensure perfect closing and withstand a high system pulsation and vibration, which can be present specifically in the discharge line.

Features

- Applicable to HCFC, HFC, R717 (Ammonia), R744 (CO_2) and all flammable refrigerants.
- Modular Concept:
  - Each valve housing is available with several different connection types and sizes.
  - Possible to convert SVA-S or SVA-L to any other product in the Flexline™ SVL family (hand operated regulating valve, check & stop valve, check valve or strainer) just by replacing the complete top part.
- Fast and easy valve overhaul service. It is easy to replace the top part and no welding is needed
- Optional accessories:
  - Heavy duty industrial hand wheel for frequent operation.
  - Cap for infrequent operation.
- Available in angleway and straightway versions with Standard neck or Long neck (DN 15 to DN 40) for insulated systems
- Each valve type is clearly marked with type, size and performance range
- The valves and caps are prepared for sealing, to prevent operation by unauthorized persons, using a seal wire
- Internal metal backseating:
  - DN 6 - 65 (¼ – 2 ½ in)

  Internal PTFE backseating:
  - DN 80 - 200 (3 – 8 in)
- Can accept flow in both directions.
- Housing and bonnet material is low temperature steel according to requirements of the Pressure Equipment Directive and other international classification authorities.
- Equipped with stainless steel bolts.
- Max. working pressure:
  52 bar g / 754 psi g
- Temperature range:
  -60 – 150 °C / -76 – 302 °F
- Classification: DNV, CRN, BV, EAC etc.
  To get an updated list of certification on the products please contact your local Danfoss Sales Company

Design

Connections
Available with the following connections:

- Butt-weld DIN (EN 10220)
- Butt-weld ANSI (B 36.10 Schedule 80), DN 6 - 40 (¼ – 1 ½ in)
- Butt-weld ANSI (B 36.10 Schedule 40), DN 50 - 200 (2 – 8 in)
- Butt-weld GOST, (8734-75 and 8732-78) DN 10 - 150 (3 8 – 6 in)
- Socket Weld (ANSI B 16.11), DN 15 - DN 50 (½ – 2 in)
- Outside pipe thread G ½ in – G 7 8 in (ISO 228/1)
- FPT Female Pipe Thread, NPT (ANSI/ASME B 1.20.1), DN 15 – 32 (½ – 1 ¼ in)

Housing
Made of special, cold resistant steel.

Valve cone
The valve cone can be turned on the spindle, thus there will be no friction between the cone and the seat when the valve is opened and closed and the special design will avoid cone spin due to pulsation and vibration when the valve is in open position. A teflon tightening ring provides perfect sealing with minimum closing force.

Spindle
Made of polished stainless steel, ideal for leap seal sealing.

Packing gland
The low temperature packing gland ensures a perfect tightness in the range: -60/+150 °C (-76/+302 °F). The packing glands are equipped with a scraper ring to prevent penetration of dirt and ice into the packing gland.

Pressure Equipment Directive (PED)
SVA valves are approved according to the European standard specified in the Pressure Equipment Directive and are CE marked.

For further details / restrictions - see Installation Instruction.

Installation
It is recommended that the valves be installed in the direction of flow indicated by the arrow on the valve body. The valve can be installed in the opposite direction but this slightly reduces the k_v-value (C_v-value).

The valve is designed to withstand high internal pressure. However, the piping system in general should be designed to avoid liquid traps and reduce the risk of hydraulic pressure caused by thermal expansion.

For further information refer to installation instructions for SVA.

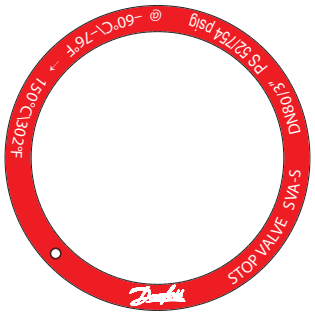

Example of Marking Ring

SVA			
Nominal bore	DN≤ 25 mm (1 in)	DN32 – 80 mm (1¼ – 3 in)	DN100 – 200 mm (4 – 8 in)
Classified for	Fluid group I		
Category	Article 3, paragraph 3	II	III

© Danfoss | DCS (mwa) | 2018.11

Technical data

- Refrigerants
  Applicable to HCFC, HFC, R717 (Ammonia), R744 (CO_2) and all flammable refrigerants.
- Temperature range
  -60 – 150 °C / -76 – 302 °F.
- Max. working pressure
  52 bar g / 754 psi g.

Connections

DIN

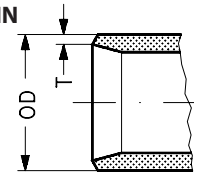

Butt-weld DIN (EN 10220)

Size [mm]	Size [in]	OD [mm]	T [mm]	OD [in]	T [in]			k_v-angle [m³/h]	k_v-straight [m³/h]	C_v-angle [USgal/min]	C_v-straight [USgal/min]
6	¼	13.5	2.3	0.531	0.091			2.9	2.0	3.4	2.4
10	⅜	17.2	2.3	0.677	0.091			4.5	3.2	5.2	3.6
15	½	21.3	2.3	0.839	0.091			7.0	4.9	8.1	5.7
20	¾	26.9	2.3	1.059	0.091			14.6	10.2	16.9	11.8
25	1	33.7	2.6	1.327	0.103			24.8	17.4	28.8	20.2
32	1 ¼	42.4	2.6	1.669	0.102			42.6	29.8	49.4	34.6
40	1 ½	48.3	2.6	1.902	0.103			45.2	31.6	52.4	36.7
50	2	60.3	2.9	2.37	0.11			80	65	93	76
65	2 ½	76.1	2.9	3	0.11			120	97	140	113
80	3	88.9	3.2	3.50	0.13			182	152	211	176
100	4	114.3	3.6	4.50	0.14			313	278	363	323
125	5	139.7	4.0	5.50	0.16			514	470	596	545
150	6	168.3	4.5	6.63	0.18			785	597	911	693
200	8	219.1	6.3	8.63	0.25			1168	1024	1355	1188

ANSI

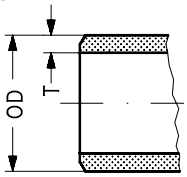

Butt-weld ANSI (B 36.10 Schedule 80)

Size [mm]	Size [in]	OD [mm]	T [mm]	OD [in]	T [in]			k_v-angle [m³/h]	k_v-straight [m³/h]	C_v-angle [USgal/min]	C_v-straight [USgal/min]
6	¼	13.5	3.0	0.531	0.118			2.9	2.03	3.4	2.4
10	⅜	17.2	3.2	0.677	0.126			4.5	3.15	5.2	3.6
15	½	21.3	3.7	0.839	0.146			7.0	4.9	8.1	5.7
20	¾	26.9	4.0	1.059	0.158			14.6	10.2	16.9	11.8
25	1	33.7	4.6	1.327	0.181			24.8	17.4	28.8	20.2
32	1 ¼	42.4	4.9	1.669	0.193			42.6	29.8	49.4	34.6
40	1 ½	48.3	5.1	1.902	0.201			45.2	31.6	52.4	36.7

Butt-weld ANSI (B 36.10 Schedule 40)

Size [mm]	Size [in]	OD [mm]	T [mm]	OD [in]	T [in]			k_v-angle [m³/h]	k_v-straight [m³/h]	C_v-angle [USgal/min]	C_v-straight [USgal/min]
50	2	60.3	3.9	2.37	0.15			80	65	93	76
65	2 ½	73.0	5.2	2.87	0.20			120	97	140	113
80	3	88.9	5.5	3.50	0.22			182	152	211	176
100	4	114.3	6.0	4.50	0.24			313	278	363	323
125	5	141.3	6.6	5.56	0.26			514	470	596	545
150	6	168.3	7.1	6.63	0.28			785	597	911	693
200	8	219.1	8.2	8.63	0.32			1168	1024	1355	1188

GOST

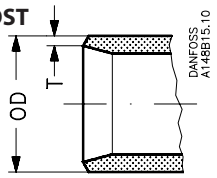

Butt-weld GOST (8734-75 and 8732-78)

Size [mm]	Size [in]	OD [mm]	T [mm]	OD [in]	T [in]			k_v-angle [m³/h]	k_v-straight [m³/h]	C_v-angle [USgal/min]	C_v-straight [USgal/min]
10	⅜	14	2	0.551	0.079			4.5	3.2	5.2	3.6
15	½	18	2	0.709	0.079			7	4.9	8.1	5.7
20	¾	25	2.5	0.984	0.098			14.6	10.2	16.9	11.8
25	1	32	3	1.260	0.118			24.8	17.4	28.8	20.2
32	1 ¼	38	3	1.496	0.118			42.6	29.8	49.4	34.6
40	1 ½	45	3	1.772	0.118			45.2	31.6	52.4	36.7
50	2	57	3.5	2.244	0.138			80	65	93	76
65	2 ½	76.1	2.9	3	0.11			120	97	140	113
80	3	88.9	3.2	3.50	0.13			182	152	211	176
100	4	108	4	4.252	0.157			313	278	363	323
125	5	133	4	5.236	0.157			514	470	596	545
150	6	159	4.5	6.260	0.177			785	597	911	693

Connections

SOC

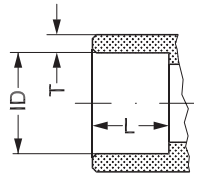

Socket welding ANSI (B 16.11)

Size [mm]	Size [in]	ID [mm]	T [mm]	ID [in]	T [in]	L [mm]	L [in]	k_v-angle [m³/h]	k_v-straight [m³/h]	C_v-angle [USgal/min]	C_v-straight [USgal/min]
15	½	21.8	6.0	0.858	0.235	10	0.39	7.0	4.9	8.1	5.7
20	¾	27.2	4.6	1.071	0.181	13	0.51	14.6	10.9	16.9	11.8
25	1	33.9	7.2	1.335	0.284	13	0.51	24.8	17.4	28.8	20.2
32	1¼	42.7	6.1	1.743	0.240	13	0.51	42.6	29.8	49.4	34.6
40	1½	48.8	6.6	1.921	0.260	13	0.51	45.2	31.6	52.4	36.7
50	2	61.2	6.2	2.41	0.24	16	0.63	80	65	93	76

FPT

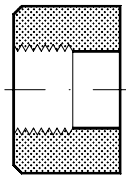

FPT inside pipe thread, NPT (ANSI/ASME B 1.20.1)

Size [mm]	Size [in]	Inside pipe tread			k_v-angle [m³/h]	k_v-straight [m³/h]	C_v-angle [USgal/min]	C_v-straight [USgal/min]
15	½	(½ × 14 NPT)			8.5	6.0	9.9	7.0
20	¾	(¾ × 14 NPT)			10	7.0	11.6	8.1
25	1	(1 × 11.5 NPT)			32	22.4	37.1	26.0
32	1¼	(1¼ × 11.5 NPT)			36	25.2	41.8	29.3

Connections - SVA 6

T

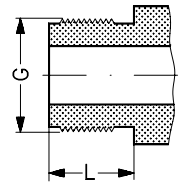

Size [mm]	Size [in]	Outside pipe thread	L [mm]	L [in]	K_V-angle [m³/h]	K_V-str. [m³/h]	C_V-angle [USgal/min]	C_V-str [USgal/min]

T outside pipe thread, (ISO 228/1)

6	¼	G ½	16	0.63	2.5	2.0	2.9	2.0

ND

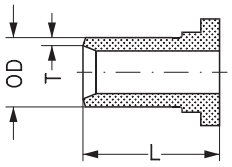

Nipples for T outside pipe thread, (ISO 228/1)

Size [mm]	Size [in]	OD [mm]	T [mm]	OD [in]	T [in]	L [mm]	L [in]	Inside pipe thread			

ND welding nipples, (DIN 2448)

6	¼	13.5	2.3	0.531	0.091	60	2.36	G½			

NA

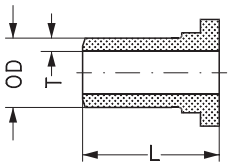

Size [mm]	Size [in]	OD [mm]	T [mm]	OD [in]	T [in]	L [mm]	L [in]	Inside pipe thread			

NA welding nipples, ANSI (B 36.10 Schedule 80)

6	¼	13.5	3.0	0.531	0.118	60	2.36	G½			

© Danfoss | DCS (mwa) | 2018.11

Material specification

SVA-S 6-10 (1/4 – 3/8 in)

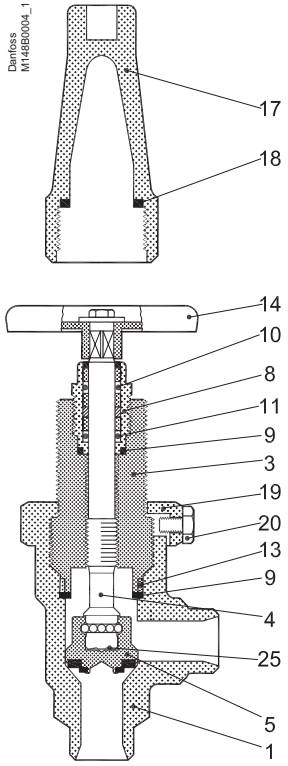

SVA-S 15-20 (1/2 – 3/4 in)

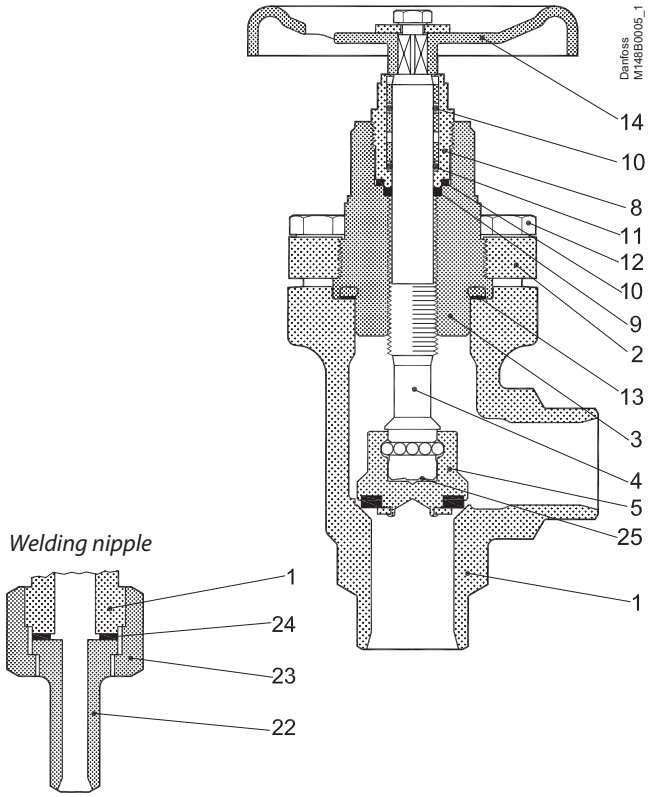

No.	Part	Material	EN	ISO	ASTM
1	Housing	Steel	G20Mn5QT, 10213-3 ---------- P285QH+QT, 10222-4		LCC, A352 ---------- LF2, A350
2	Bonnet, Flange	Steel	G20Mn5QT, 10213-3 ---------- P285QH+QT, 10222-4 ---------- P275NL, 10028-3		LCC, A352 ---------- LF2, A350
3	Bonnet, Insert	Steel	11SMn30 10087	Type 2 R 683/9	AISI 1213
4	Spindle	Stainless steel	X8CrNiS18-9 10088	Type 17 683/13	AISI 303
5	Cone	Steel	11SMn30 10087	Type 2 R 683/9	AISI 1213
8	Packing gland	Stainless steel	X8CrNiS18-9 10088	Type 17 683/13	AISI 303
9	Packing washer	Aluminium			
10	O-ring	Cloroprene (Neoprene)			
11	Spring loaded Teflon ring	PTFE			
12	Bolts	Stainless steel	A2-70	A2-70	Type 308
13	Gasket	Fiber, Non-asbestos			
14	Handwheel	Steel			
17	Cap	Aluminium			
18	Gasket for cap	Nylon			
19	Locking nut	Steel			
20	Screw	Steel			
22	Welding nipple	Steel	S235JRG2 10025	Fe260B, 630	Grade C, A 283
23	Nut	Steel	11SMn30 10087	Type 2 R 683/9	AISI 1213
24	Packing washer	Non-asbestos			
25	Disk spring	Steel			

Material specification

SVA-S 25-40 (1 – 1 ½ in)

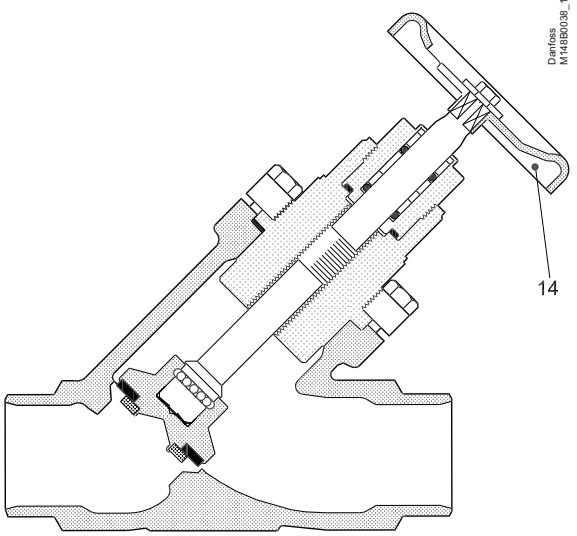

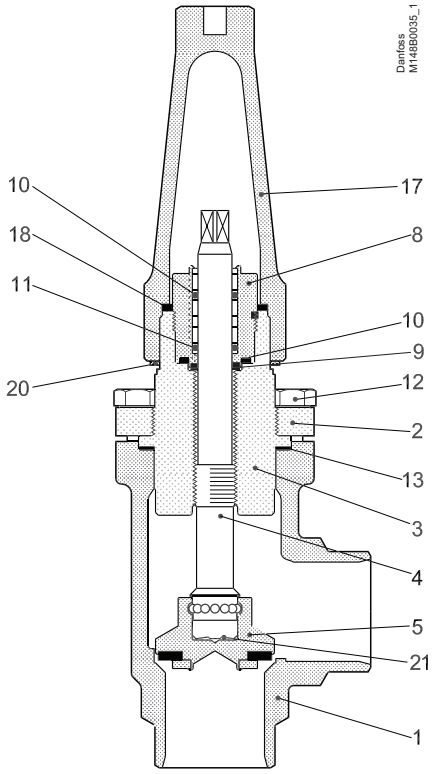

No.	Part	Material	EN	ISO	ASTM
1	Housing	Steel	G20Mn5QT, 10213-3 ---------- P285QH+QT, 10222-4		LCC, A352 ---------- LF2, A350
2	Bonnet, Flange	Steel	G20Mn5QT, 10213-3 ---------- P285QH+QT, 10222-4 ---------- P275NL, 10028-3		LCC, A352 ---------- LF2, A350
3	Bonnet, Insert	Steel	11SMn30 10087	Type 2 R 683/9	AISI 1213
4	Spindle	Stainless steel	X8CrNiS18-9 10088	Type 17 683/13	AISI 303
5	Cone	Steel	11SMn30 10087	Type 2 R 683/9	AISI 1213
8	Packing gland	Stainless steel	X8CrNiS18-9 10088	Type 17 683/13	AISI 303
9	Packing washer	Aluminium			
10	O-ring	Cloroprene (Neoprene)			
11	Spring loaded Teflon ring	PTFE			
12	Bolts	Stainless steel	A2-70	A2-70	Type 308
13	Gasket	Fiber, Non-asbestos			
14	Handwheel	Steel			
17	Cap	Aluminium			
18	Gasket for cap	Nylon			
20	Identification ring	Stainless steel			
21	Disk spring	Steel			

© Danfoss | DCS (mwa) | 2018.11

Material specification

SVA-L 15 - 40 (½ – 1 ½ in)

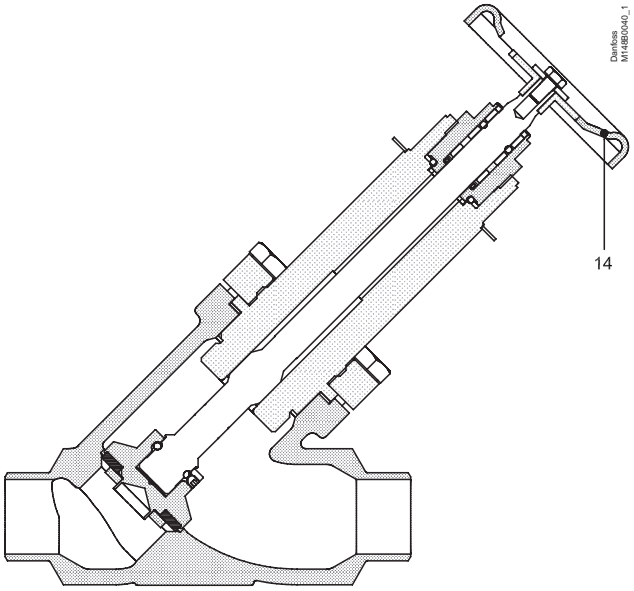

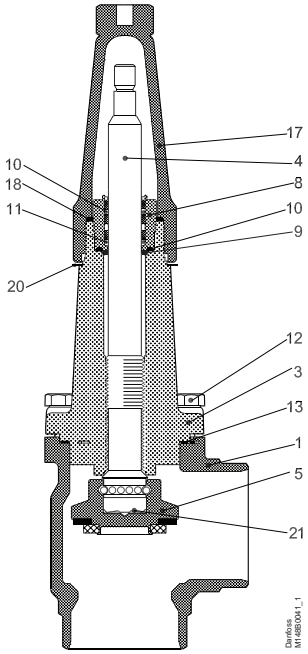

No.	Part	Material	EN	ISO	ASTM
1	Housing	Steel	G20Mn5QT, 10213-3 ---------- P285QH+QT, 10222-4		LCC, A352 ---------- LF2, A350
3	Valve bonnet	Steel	G20Mn5QT, 10213-3 ---------- P285QH+QT, 10222-4		LCC, A352 ---------- LF2, A350
4	Spindle	Stainless steel	X8CrNiS18-9 10088	Type 17 683/13	AISI 303
5	Cone	Steel	11SMn30 10087	Type 2 R 683/9	AISI 1213
8	Packing gland	Stainless steel	X8CrNiS18-9 10088	Type 17 683/13	AISI 303
9	Packing washer	Aluminium			
10	O-ring	Cloroprene (Neoprene)			
11	Spring loaded Teflon ring	PTFE			
12	Bolts	Stainless steel	A2-70	A2-70	Type 308
13	Gasket	Fiber, Non-asbestos			
14	Hand wheel	Steel			
17	Cap	Aluminium			
18	Gasket for cap	Nylon (PA6)			
20	Identification ring	Stainless steel			
21	Disk spring	Steel			

Material specification

SVA-S 50-65 (2 – 2 ½ in)

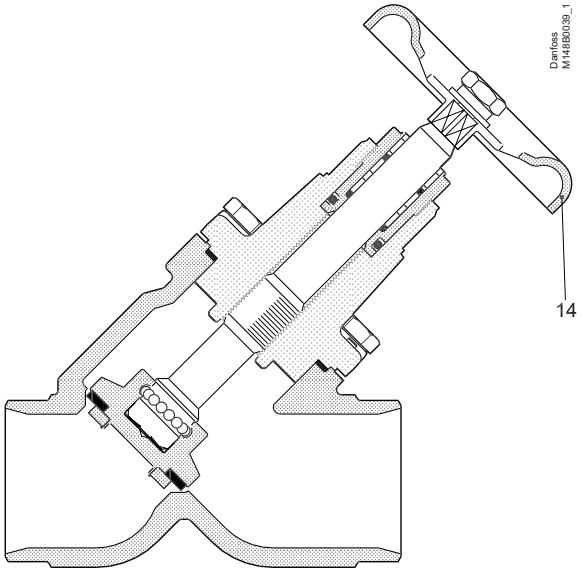

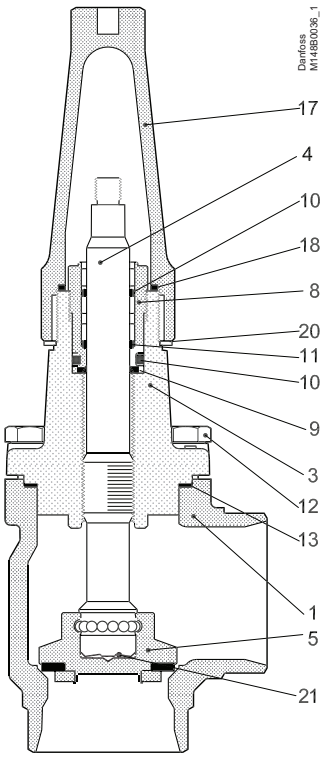

No.	Part	Material	EN	ISO	ASTM
1	Housing	Steel	G20Mn5QT, 10213-3 ---------- P285QH+QT, 10222-4		LCC, A352 ---------- LF2, A350
3	Valve bonnet	Steel	G20Mn5QT, 10213-3 ---------- P285QH+QT, 10222-4		LCC, A352 ---------- LF2, A350
4	Spindle	Stainless steel	X8CrNiS18-9 10088 DIN 17440 (SVA-SS only)	Type 17 683/13	AISI 303
5	Cone	Steel	11SMn30 10087	Type 2 R 683/9	AISI 1213
8	Packing gland	Stainless steel	X8CrNiS18-9 10088	Type 17 683/13	AISI 303
9	Packing washer	Aluminium			
10	O-ring	Cloroprene (Neoprene)			
11	Spring loaded Teflon ring	PTFE			
12	Bolts	Stainless steel	A2-70	A2-70	Type 308
13	Gasket	Fiber, Non-asbestos			
14	Handwheel	Steel			
17	Cap	Aluminium			
18	Gasket for cap	Nylon			
19	Locking nut	Steel			
20	Identification ring	Stainless steel			
21	Disk spring	Steel			

© Danfoss | DCS (mwa) | 2018.11

Material specification

SVA-S 80 - 150 (3 – 6 in)

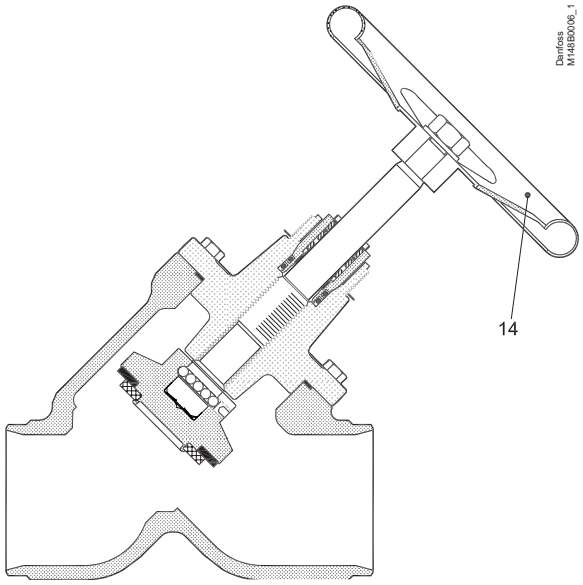

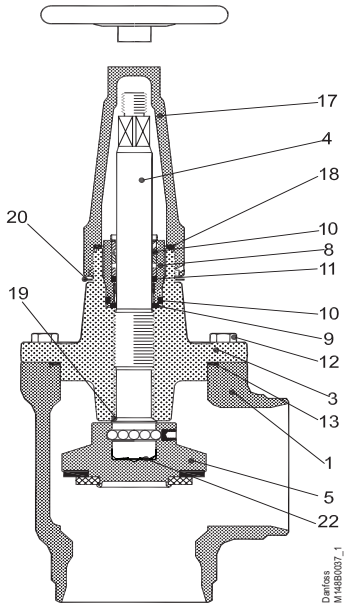

No.	Part	Material	EN	ISO	ASTM
1	Housing	Steel	G20Mn5QT 10213-3		LCC A352
3	Valve bonnet	Steel	SVA 80: G20Mn5QT SVA 100: P285QH+QT SVA 125: P285QH+QT SVA 150: P285QH+QT		SVA 80: LCC, A352 SVA 100: LF2, A350 SVA 125: LF2, A350 SVA 150: LF2, A350
4	Spindle	Stainless steel	X5CrNi18-10 10088	Type 11, R 683/13	AISI 304, A276
5	Cone Cone seal	Steel Teflon (PTFE)	11SMn30 10087	Type 2, R 683/9	AISI 1213
8	Packing gland	Stainless steel	X8CrNiS18-9 10088	Type 17 R 683/13	AISI 303
9	Packing washer	Aluminium			
10	O-ring	Cloroprene (Neoprene)			
11	Spring loaded Teflon ring	PTFE			
12	Bolts	Stainless steel	A2-70	A2-70	Type 308
13	Gasket	Fiber, Non-asbestos			
14	Hand wheel	Steel			
17	Cap	Aluminium			
18	Gasket for cap	Nylon (PA 6)			
19	Soft backseat	Teflon (PTFE)			
20	Identification ring	Stainless steel			
22	Disk spring	Steel			

Material specification

SVA-S 200 (8 in)

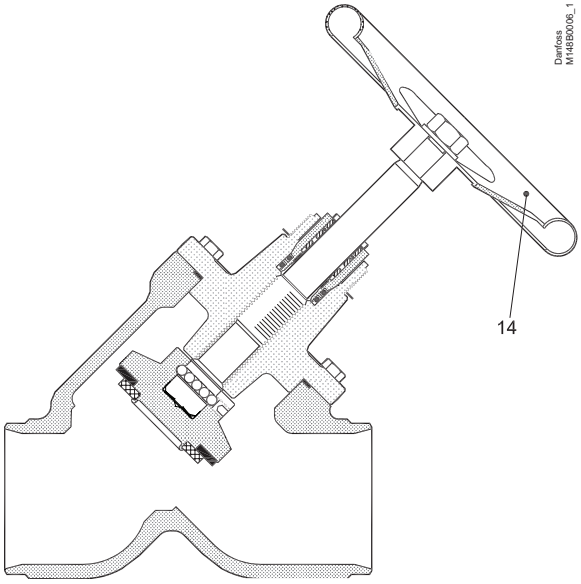

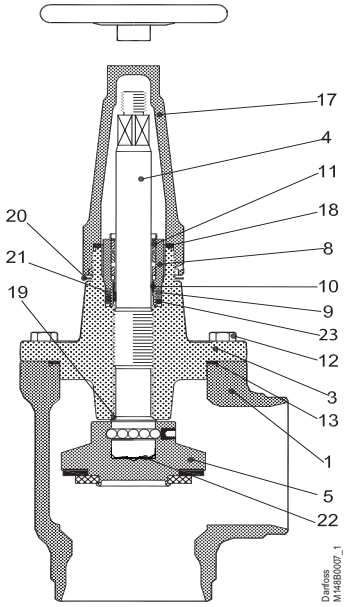

No.	Part	Material	EN	ISO	ASTM
1	Housing	Steel	G20Mn5QT 10213-3		LCC A352
3	Valve bonnet	Steel	G20Mn5QT, 10213-3 ---------- P285QH+QT, 10222-4		LCC, A352 ---------- LF2, A350
4	Spindle	Stainless steel	X5CrNi18-10 10088	Type 11, R 683/13	AISI 304, A276
5	Cone Cone seal	Steel Teflon (PTFE)	11SMn30 10087	Type 2, R 683/9	AISI 1213
8	Packing gland	Stainless steel	X8CrNiS18-9 10088	Type 17 R 683/13	AISI 303
9	O-ring	Cloroprene (Neoprene)			
10	Spring loaded Teflon ring	PTFE			
11	O-ring	Cloroprene (Neoprene)			
12	Bolts	Stainless steel	A2-70	A2-70	Type 308
13	Gasket	Fiber, Non-asbestos			
14	Hand wheel	Steel			
15	Washer	Stainless steel			
16	Nut	Stainless steel			
17	Cap	Aluminium			
18	Gasket for cap	Nylon (PA 6)			
19	Soft backseat	Teflon (PTFE)			
20	Identification ring	Stainless steel			
21	Wear ring	Teflon (PTFE)			
22	Disk spring	Steel			
23	O-ring	PTFE/Cloroprene (Neoprene)			

© Danfoss | DCS (mwa) | 2018.11

Dimensions and weights

SVA 6 -10 in angle execution with handwheel

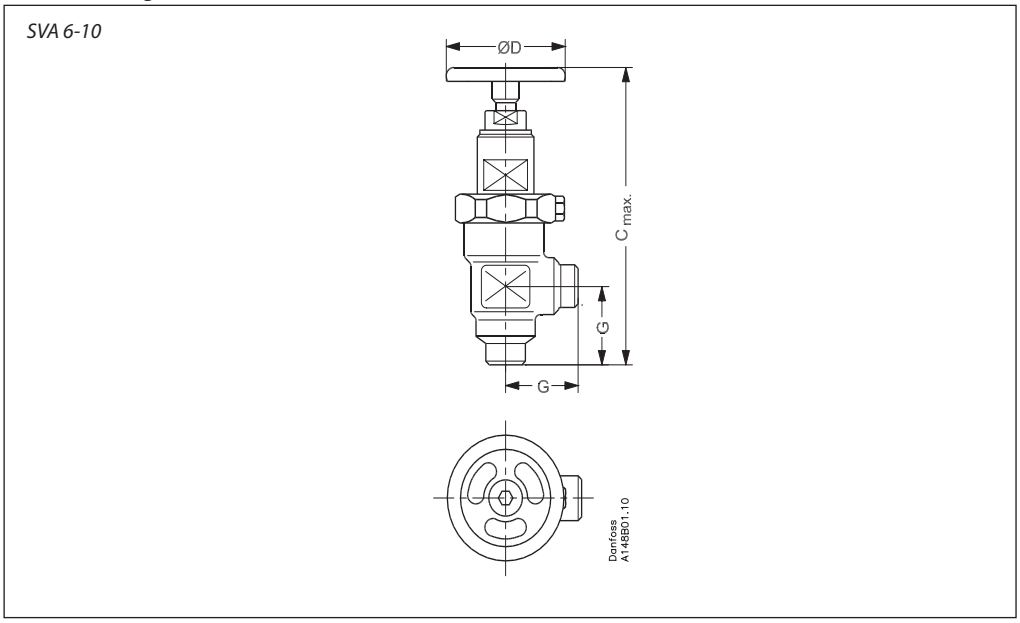

Valve size		$C_{max.}$	G	ØD	□H	Weight
SVA 6	[mm] [in]	128 5.04	30 1.18	50 1.97		0.7 kg
SVA 10	[mm] [in]	173 6.81	45 1.77	60 2.36	60 2.36	1.4 kg

SVA 6 - 10 in angle execution with cap

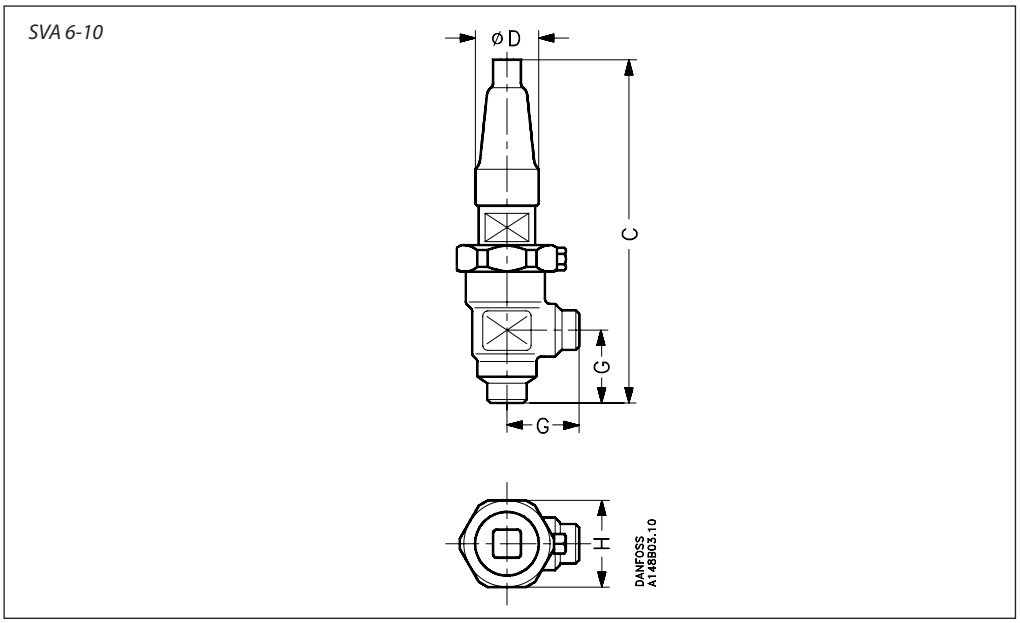

Valve size		C	G	ØD	□H	Weight
SVA 6	[mm] [in]	139 5.47	30 1.18	30 1.18	48 1.89	0.8 kg
SVA 10	[mm] [in]	182 7.17	45 1.77	38 1.50	60 2.36	1.4 kg

Specified weights are approximate values only.

Dimensions and weights

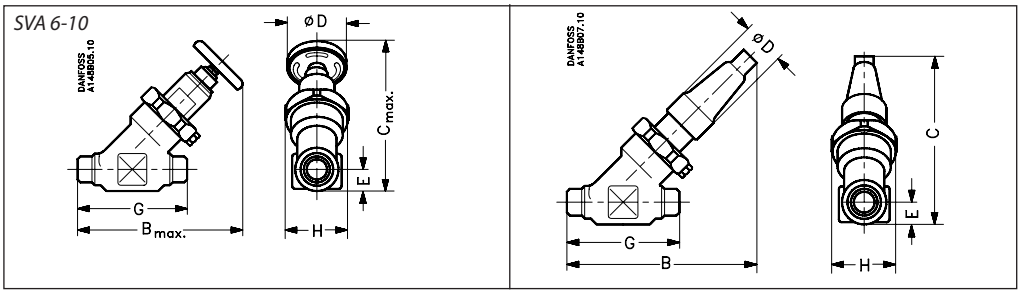

SVA 6 - 10 in straight-way execution with handwheel

Valve size		$C_{max.}$	$B_{max.}$	E	G	ØD	□H	Weight
SVA 6	[mm]	110	120	13	70	50	48	0.7 kg
	[in]	4.33	4.72	0.49	2.76	1.97	1.89	
SVA 10	[mm]	145	160	20	120	60	60	2.0 kg
	[in]	5.71	6.30	0.79	4.72	2.36	2.36	

SVA 6 - 10 in straight-way execution with cap

Valve size		C	B	E	G	ØD	□H	Weight
SVA 6	[mm]	110	120	13	70	30	48	0.8 kg
	[in]	4.33	4.72	0.49	2.76	1.16	1.89	
SVA 10	[mm]	145	155	20	120	38	60	2.0 kg
	[in]	5.71	6.10	0.79	4.72	1.50	2.36	

Specified weights are approximate values only.

SVA 15 - 40 (½ – 1 ½ in) in angleway version with cap / hand wheel

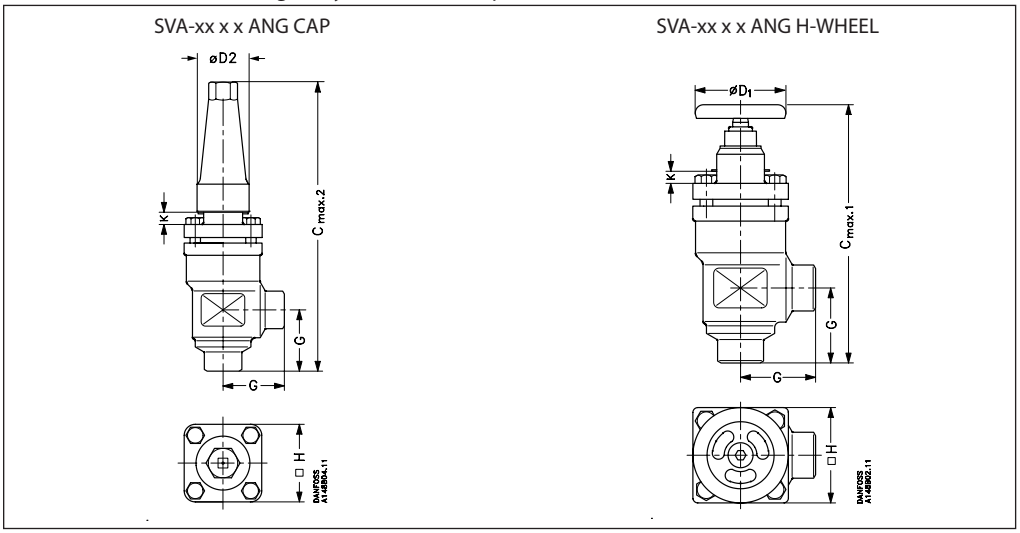

Valve size		K	$C_{max.1}$	$C_{max.2}$	G	$ØD_1$	$ØD_2$	□H	Weight
SVA-S									
SVA 15 - 20	[mm]	4	178	189	45	60	38	60	1.4 kg
SVA (½ - ¾)	[in]	0.16	7.00	7.44	1.77	2.36	1.5	2.36	3.1 lb
SVA 25 - 40	[mm]	12	234	268	55	80	50	70	2.4 kg
SVA (1 - 1 ½)	[in]	0.47	9.21	10.55	2.17	3.15	1.97	2.76	5.3 lb
SVA-S, Socket weld									
SVA 32 - 40	[mm]	12	241	275	62	80	50	70	2.9 kg
SVA (1 ¼ - 1 ½)	[in]	0.47	9.49	10.83	2.44	3.15	1.97	2.76	6.4 lb
SVA-L									
SVA 15 - 20	[mm]	63	237	248	45	60	38	60	1.4 kg
SVA (½ - ¾)	[in]	2.48	9.33	9.76	1.77	2.36	1.5	2.36	3.1 lb
SVA 25 - 40	[mm]	74	296	330	55	80	50	70	2.4 kg
SVA (1 - 1 ½)	[in]	2.91	11.65	12.99	2.17	3.15	1.97	2.76	5.3 lb
SVA-L, Socket weld									
SVA 32 - 40	[mm]	74	303	337	62	80	50	70	2.9 kg
SVA (1 ¼ - 1 ½)	[in]	2.91	11.93	13.27	2.44	3.15	1.97	2.76	6.4 lb

Specified weights are approximate values only.

© Danfoss | DCS (mwa) | 2018.11

Dimensions and weights

SVA 15 - 40 (½ - 1 ½ in) straightway version with cap / hand wheel

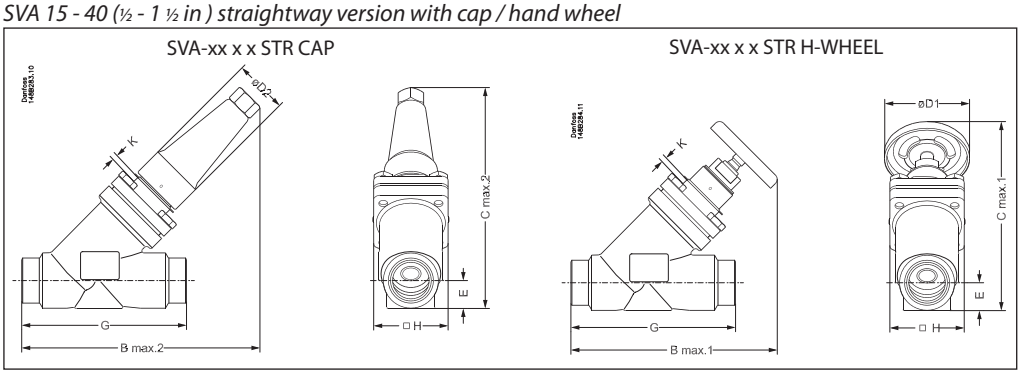

Valve size		K	$C_{max.1}$	$C_{max.2}$	$B_{max.1}$	$B_{max.2}$	E	G	$ØD_1$	$ØD_2$	□H	Weight
SVA-S												
SVA 15 - 20	[mm]	4	146	141	160	156	20	120	60	38	60	2.0 kg
SVA (½ - ¾)	[in]	0.16	5.74	5.55	6.30	6.14	0.79	4.72	2.36	1.50	2.36	4.4 lb
SVA 25 - 40	[mm]	12	199	208	212	222	26	155	80	50	70	3.0 kg
SVA (1 - 1½)	[in]	0.47	7.83	8.19	8.35	8.74	1.02	6.10	3.15	1.97	2.76	6.6 lb
SVA-S, Socket weld												
SVA 32	[mm]	12	200	209	212	222	27.4	155	80	50	70	3.0 kg
SVA (1 ¼)	[in]	0.47	7.87	8.23	8.35	8.74	1.08	6.10	3.15	1.97	2.76	6.6 lb
SVA 40	[mm]	12	204	213	212	222	31.0	155	80	50	70	3.0 kg
SVA (1½)	[in]	0.47	8.03	8.39	8.35	8.74	1.22	6.10	3.15	1.97	2.76	6.6 lb
SVA-L												
SVA 15 - 20	[mm]	63	188	184	202	198	20	120	60	38	60	2.0 kg
SVA (½ - ¾)	[in]	2.48	7.40	7.24	7.95	7.80	0.79	4.72	2.36	1.50	2.36	4.4 lb
SVA 25 - 40	[mm]	74	243	252	256	265	26	155	80	50	70	3.0 kg
SVA (1 - 1 ½)	[in]	2.91	9.57	9.92	10.08	10.43	1.02	6.10	3.15	1.97	2.76	6.6 lb
SVA-L, Socket weld												
SVA 32	[mm]	74	244	253	256	265	27.4	155	80	50	70	3.0 kg
SVA (1 ¼)	[in]	2.91	9.61	9.96	10.08	10.43	1.08	6.10	3.15	1.97	2.76	6.6 lb
SVA 40	[mm]	74	248	257	256	265	31.0	155	80	50	70	3.0 kg
SVA (1 ½)	[in]	2.91	9.76	10.12	10.08	10.43	1.22	6.10	3.15	1.97	2.76	6.6 lb

Specified weights are approximate values only.

Dimensions and weights

SVA 50 - 65 (2 – 2 ½ in) in angleway version with cap / hand wheel

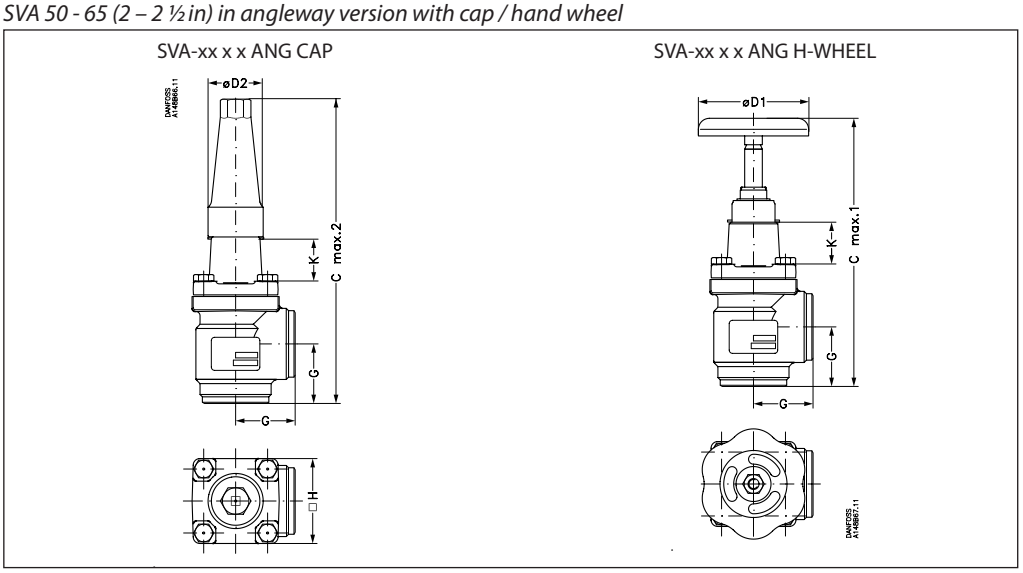

Valve size		K		$C_{max.1}$	$C_{max.2}$		G	$ØD_1$	$ØD_2$	□H		Weight
SVA-S												
SVA 50	[mm]	70		284	315		60	100	50	77		3.2 kg
SVA (2)	[in]	2.76		11.18	12.40		2.36	3.94	1.97	3.03		7.1 lb
SVA 65	[mm]	70		310	335		70	100	50	90		4.8 kg
SVA (2 ½)	[in]	2.76		12.20	13.19		2.76	3.94	1.97	3.54		10.6 lb
SVA-S, Socket weld												
SVA 50	[mm]	70		289	320		65	100	50	77		4.1 kg
SVA (2)	[in]	2.76		11.38	12.60		2.56	3.94	1.97	3.03		9.0 lb

Specified weights are approximate values only.

Dimensions and weights

SVA 50 - 65 (2 - 2 ½ in) in straightway version with cap / hand wheel

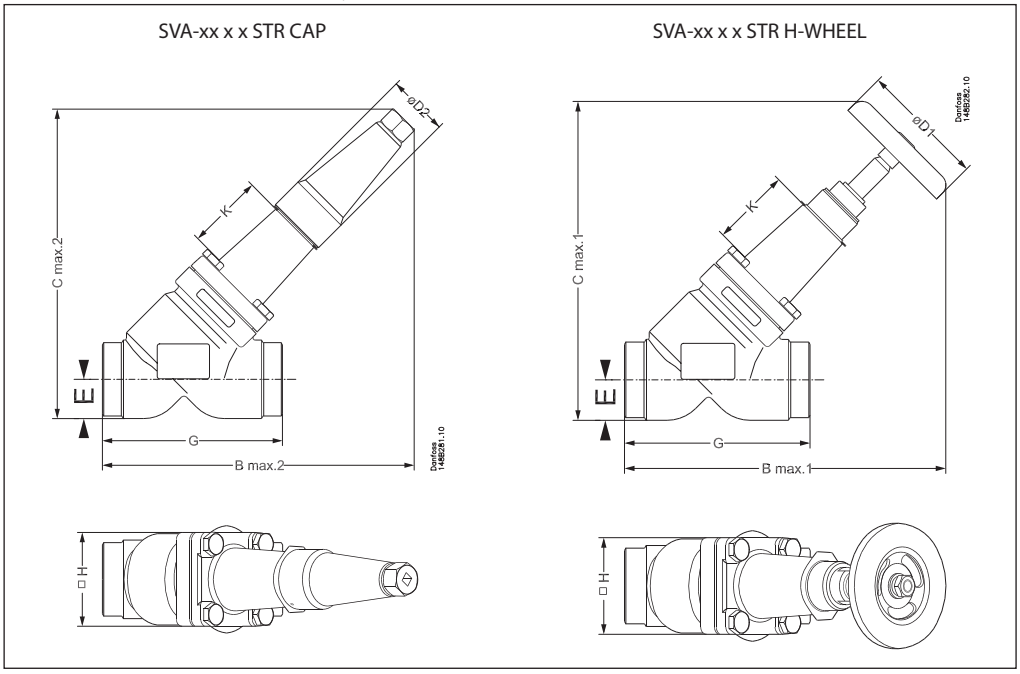

Valve size		K	$B_{max.1}$	$B_{max.2}$	$C_{max.1}$	$C_{max.2}$	E	G	$\varnothing D_1$	$\varnothing D_2$	□H	Weight
SVA-S												
SVA 50	[mm]	70	259	259	257	257	32	148	100	50	77	4.2 kg
SVA (2)	[in]	2.76	10.20	10.20	10.12	10.12	1.26	5.83	3.94	1.97	3.03	9.3 lb
SVA 65	[mm]	70	284	280	284	280	40	176	100	50	90	6.3 kg
SVA (2½)	[in]	2.76	11.18	11.02	11.18	11.02	1.57	6.93	3.94	1.97	3.54	13.9 lb
SVA-S, Socket weld												
SVA 50	[mm]	70	266	266	261	261	37	162	100	50	77	5.1 kg
SVA (2)	[in]	2.76	10.47	10.47	10.28	10.28	1.26	6.38	3.94	1.97	3.03	11.2 lb

Specified weights are approximate values only.

© Danfoss | DCS (mwa) | 2018.11

Dimensions and weights

SVA 80 - 200 (3 - 8 in) angleway version with cap / hand wheel

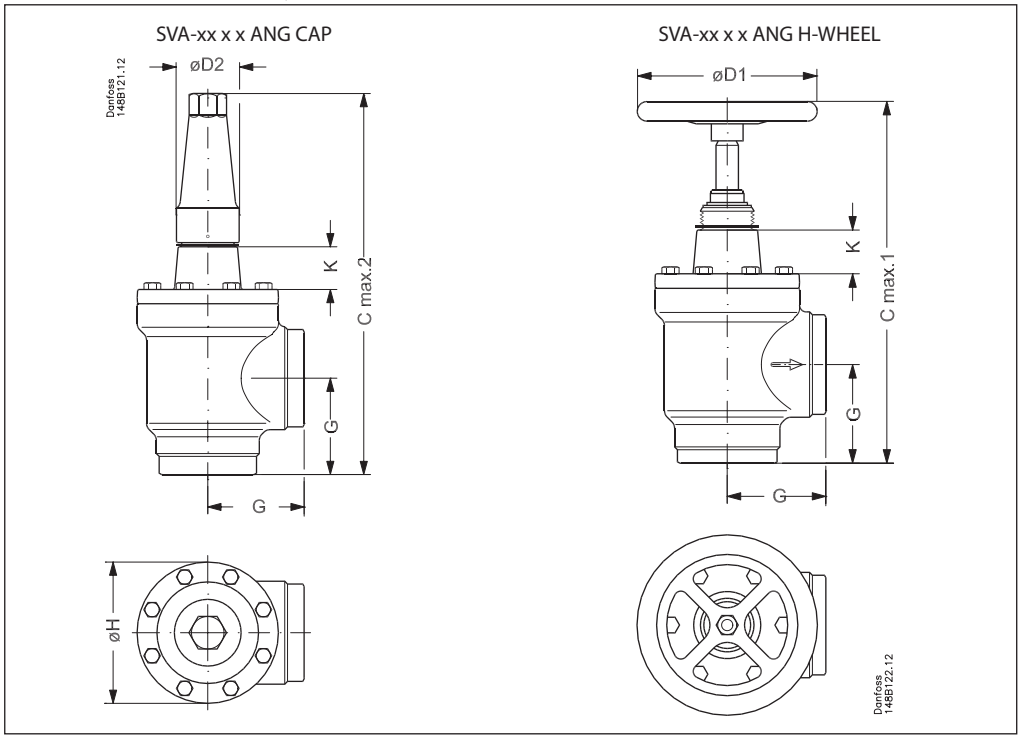

Valve size		K	$C_{max.1}$	$C_{max.2}$	G	$ØD_1$	$ØD_2$	ØH	Weight
SVA-S									
SVA 80	[mm]	76	373	388	90	200	58	129	9.7 kg
SVA (3)	[in]	3.00	14.69	15.28	3.54	7.87	2.28	5.08	21.4 lb
SVA 100	[mm]	90	432	437	106	250	58	156	15.3 kg
SVA (4)	[in]	3.54	17.00	17.20	4.17	9.84	2.28	6.14	33.7 lb
SVA 125	[mm]	90	517	533	128	315	74	193	28.1 kg
SVA (5)	[in]	3.54	20.35	20.98	5.04	12.40	2.91	7.60	61.9 lb
SVA 150	[mm]	90	564	568	145	315	74	219	39.7 kg
SVA (6)	[in]	3.54	22.20	22.36	5.71	12.40	2.91	8.62	87.5 lb
SVA 200	[mm]	90	677	678	180	400	86	276	79.5 kg
SVA (8)	[in]	3.54	26.63	26.69	7.09	15.75	3.39	10.87	175.3 lb

Specified weights are approximate values only.

Dimensions and weights

SVA 80 - 200 (3 - 8 in) straightway version with cap / hand wheel

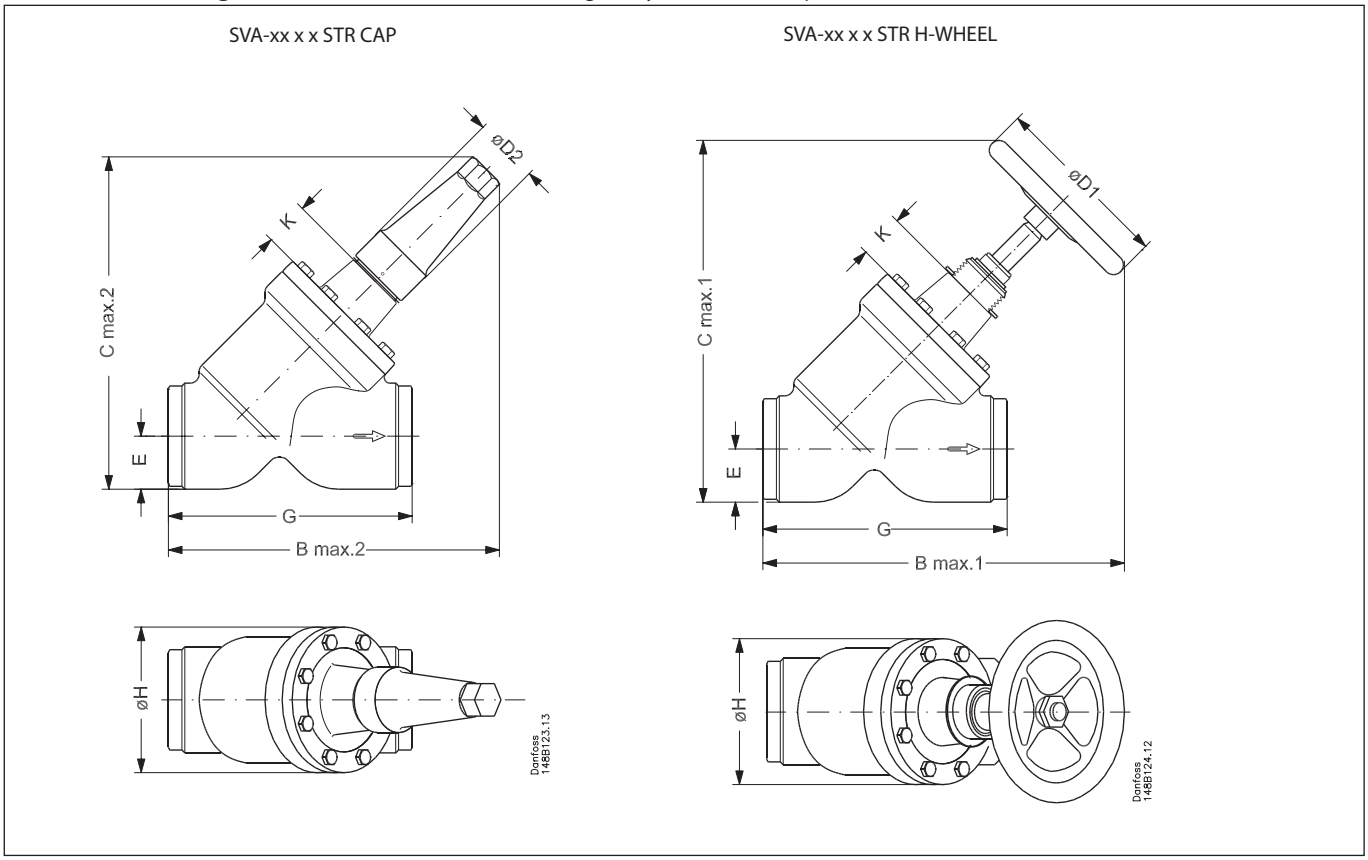

Valve size		K	$B_{max.1}$	$B_{max.2}$	$C_{max.1}$	$C_{max.2}$	E	G	$\varnothing D_1$	$\varnothing D_2$	ØH	Weight
SVA-S												
SVA 80	[mm]	76	365	321	367	322	48	216	200	58	129	10.9 kg
SVA (3)	[in]	3.00	14.37	12.64	14.45	12.72	1.89	8.50	7.87	2.28	5.08	24.0 lb
SVA 100	[mm]	90	435	367	443	375	60	264	250	58	156	18.2 kg
SVA (4)	[in]	3.54	17.13	14.45	17.44	14.76	2.36	10.39	9.84	2.28	6.14	40.1 lb
SVA 125	[mm]	90	526	444	538	456	74	322	315	74	193	32.8 kg
SVA (5)	[in]	3.54	20.71	17.48	21.18	17.95	2.91	12.68	12.40	2.91	7.60	72.3 lb
SVA 150	[mm]	90	572	483	594	505	91	370	315	74	219	60.0 kg
SVA (6)	[in]	3.54	22.52	19.02	23.39	19.88	3.58	14.57	12.40	2.91	8.62	132.3 lb
SVA 200	[mm]	90	692	579	726	613	117	464	400	86	276	111.5 kg
SVA (8)	[in]	3.54	27.24	22.80	28.58	24.13	4.61	18.27	15.75	3.39	10.87	245.8 lb

Specified weights are approximate values only.

© Danfoss | DCS (mwa) | 2018.11

Ordering

Available connection sizes

SVA-**S**:
The **S** means **S**tandard bonnet length (sizes from DN50 to DN200 are insulation friendly)

SVA-**L**:
The **L** means **L**ong bonnet length (insulation friendly)

Size	SVA-S	SVA-L
6	x	
10	x	
15	x	x
20	x	x
25	x	x
32	x	x
40	x	x
50	x	
65	x	
80	x	
100	x	
125	x	
150	x	
200	x	

Please note that the type codes only serve to identify the valves, some of which may not form part of the standard product range. For further information please contact your local Danfoss Sales Company.

Type codes

Valve type	SVA	Shut-off valve					
Nominal size in mm			Available connections				
			A/D	G	SOC	FPT	T
(valve size measured on the connection diameter)	**6**	DN 6 (1/4)	x				x
	10	DN 10 (3/8)	x	x			
	15	DN 15 (½)	x	x	x	x	
	20	DN 20 (¾)	x	x	x	x	
	25	DN 25 (1)	x	x	x	x	
	32	DN 32 (1¼)	x	x	x	x	
	40	DN 40 (1½)	x	x	x		
	50	DN 50 (2)	x	x	x		
	65	DN 65 (2½)	x				
	80	DN 80 (3)	x				
	100	DN 100 (4)	x	x			
	125	DN 125 (5)	x	x			
	150	DN 150 (6)	x	x			
	200	DN 200 (8)	x				
Connections	**A**	Butt-weld connection: ANSI B 36.10 schedule 80, DN 15 - 40 (½ - 1½ in)					
		Butt-weld connection: ANSI B 36.10 schedule 40, DN 50 - 200 (2 - 8 in)					
	D	Butt-weld connection: DIN EN 10220					
	G	Butt-weld connection: GOST (8734-75 and 8732-78)					
	SOC	Socket weld: ANSI B 16.11					
	FPT	Female Pipe Thread NPT: ANSI/ASME B 1.20.1					
	T	Outside threaded connections ISO 228/1 Pipe thread					
Valve housing	**ANG**	Angle flow					
	STR	Straight flow					
Other equipment	**H-WHEEL**	Hand wheel					
	CAP	Cap					

Important!
Where products need to be certified according to specific certification societies or where higher pressures are required, the relevant information should be included at the time of order.

Ordering SVA-S complete valves

Example:
SVA-S 20 DIN angleway with hand wheel = **148B5300**

Important!
Where products need to be certified according to specific certification societies or where higher pressures are required, the relevant information should be included at the time of order.

ANG = Angleway
STR = Straightway

CAP = Cap
H-WHEEL = Hand wheel

SVA-S Angleway

Size [mm]	Size [in]	Type	MWP [bar]	MWP [psi]	Code number
Butt-weld DIN (EN 10220)					
6	¼	SVA-S 6 D ANG H-WHEEL	52	754	**148B5000**
6	¼	SVA-S 6 D ANG CAP	52	754	**148B5001**
10	3/8	SVA-S 10 D ANG H-WHEEL	52	754	**148B5100**
10	3/8	SVA-S 10 D ANG CAP	52	754	**148B5101**
15	½	SVA-S 15 D ANG H-WHEEL	52	754	**148B5200**
15	½	SVA-S 15 D ANG CAP	52	754	**148B5201**
20	¾	SVA-S 20 D ANG H-WHEEL	52	754	**148B5300**
20	¾	SVA-S 20 D ANG CAP	52	754	**148B5301**
25	1	SVA-S 25 D ANG H-WHEEL	52	754	**148B5400**
25	1	SVA-S 25 D ANG CAP	52	754	**148B5401**
32	1 ¼	SVA-S 32 D ANG H-WHEEL	52	754	**148B5500**
32	1 ¼	SVA-S 32 D ANG CAP	52	754	**148B5501**
40	1 ½	SVA-S 40 D ANG H-WHEEL	52	754	**148B5600**
40	1 ½	SVA-S 40 D ANG CAP	52	754	**148B5601**
50	2	SVA-S 50 D ANG H-WHEEL	52	754	**148B5700**
50	2	SVA-S 50 D ANG CAP	52	754	**148B5701**
65	2 ½	SVA-S 65 D ANG H-WHEEL	52	754	**148B5800**
65	2 ½	SVA-S 65 D ANG CAP	52	754	**148B5801**
80	3	SVA-S 80 D ANG H-WHEEL	52	754	**148B5900**
80	3	SVA-S 80 D ANG CAP	52	754	**148B5901**
100	4	SVA-S 100 D ANG H-WHEEL	52	754	**148B6000**
100	4	SVA-S 100 D ANG CAP	52	754	**148B6001**
125	5	SVA-S 125 D ANG H-WHEEL	52	754	**148B6100**
125	5	SVA-S 125 D ANG CAP	52	754	**148B6101**
150	6	SVA-S 150 D ANG H-WHEEL	52	754	**148B6200**
150	6	SVA-S 150 D ANG CAP	52	754	**148B6201**
200	8	SVA-S 200 D ANG H-WHEEL	52	754	**148B6300**
200	8	SVA-S 200 D ANG CAP	52	754	**148B6301**
Butt-weld ANSI (B 36.10 Schedule 80)					
6	¼	SVA-S 6 A ANG H-WHEEL	52	754	**148B5020**
6	¼	SVA-S 6 A ANG CAP	52	754	**148B5021**
10	3/8	SVA-S 10 A ANG H-WHEEL	52	754	**148B5120**
10	3/8	SVA-S 10 A ANG CAP	52	754	**148B5121**
15	½	SVA-S 15 A ANG H-WHEEL	52	754	**148B5220**
15	½	SVA-S 15 A ANG CAP	52	754	**148B5221**
20	¾	SVA-S 20 A ANG H-WHEEL	52	754	**148B5320**
20	¾	SVA-S 20 A ANG CAP	52	754	**148B5321**
25	1	SVA-S 25 A ANG H-WHEEL	52	754	**148B5420**
25	1	SVA-S 25 A ANG CAP	52	754	**148B5421**
32	1 ¼	SVA-S 32 A ANG H-WHEEL	52	754	**148B5520**
32	1 ¼	SVA-S 32 A ANG CAP	52	754	**148B5521**
40	1 ½	SVA-S 40 A ANG H-WHEEL	52	754	**148B5620**
40	1 ½	SVA-S 40 A ANG CAP	52	754	**148B5621**
Butt-weld ANSI (B 36.10 Schedule 40)					
50	2	SVA-S 50 A ANG H-WHEEL	52	754	**148B5720**
50	2	SVA-S 50 A ANG CAP	52	754	**148B5721**
65	2 ½	SVA-S 65 A ANG H-WHEEL	52	754	**148B5820**
65	2 ½	SVA-S 65 A ANG CAP	52	754	**148B5821**
80	3	SVA-S 80 A ANG H-WHEEL	52	754	**148B5920**
80	3	SVA-S 80 A ANG CAP	52	754	**148B5921**
100	4	SVA-S 100 A ANG H-WHEEL	52	754	**148B6020**
100	4	SVA-S 100 A ANG CAP	52	754	**148B6021**
125	5	SVA-S 125 A ANG H-WHEEL	52	754	**148B6120**
125	5	SVA-S 125 A ANG CAP	52	754	**148B6121**
150	6	SVA-S 150 A ANG H-WHEEL	52	754	**148B6220**
150	6	SVA-S 150 A ANG CAP	52	754	**148B6221**
200	8	SVA-S 200 A ANG H-WHEEL	52	754	**148B6320**
200	8	SVA-S 200 A ANG CAP	52	754	**148B6321**
Butt-weld, GOST					
150	6	SVA-S 150 G ANG H-WHEEL	52	754	**148B6240**
150	6	SVA-S 150 G ANG CAP	52	754	**148B6241**
Socket welding ANSI (B 16.11)					
15	½	SVA-S 15 SOC ANG H-WHEEL	52	754	**148B5222**
15	½	SVA-S 15 SOC ANG CAP	52	754	**148B5223**
20	¾	SVA-S 20 SOC ANG H-WHEEL	52	754	**148B5322**
20	¾	SVA-S 20 SOC ANG CAP	52	754	**148B5323**
25	1	SVA-S 25 SOC ANG H-WHEEL	52	754	**148B5422**
25	1	SVA-S 25 SOC ANG CAP	52	754	**148B5423**
32	1 ¼	SVA-S 32 SOC ANG H-WHEEL	52	754	**148B5522**
32	1 ¼	SVA-S 32 SOC ANG CAP	52	754	**148B5523**
40	1 ½	SVA-S 40 SOC ANG H-WHEEL	52	754	**148B5622**
40	1 ½	SVA-S 40 SOC ANG CAP	52	754	**148B5623**
50	2	SVA-S 50 SOC ANG H-WHEEL	52	754	**148B5722**
50	2	SVA-S 50 SOC ANG CAP	52	754	**148B5723**

SVA-S Straightway

Size [mm]	Size [in]	Type	MWP [bar]	MWP [psi]	Code number
Butt-weld DIN (EN 10220)					
6	¼	SVA-S 6 D STR H-WHEEL	52	754	**148B5010**
6	¼	SVA-S 6 D STR CAP	52	754	**148B5011**
10	3/8	SVA-S 10 D STR H-WHEEL	52	754	**148B5110**
10	3/8	SVA-S 10 D STR CAP	52	754	**148B5111**
15	½	SVA-S 15 D STR H-WHEEL	52	754	**148B5210**
15	½	SVA-S 15 D STR CAP	52	754	**148B5211**
20	¾	SVA-S 20 D STR H-WHEEL	52	754	**148B5310**
20	¾	SVA-S 20 D STR CAP	52	754	**148B5311**
25	1	SVA-S 25 D STR H-WHEEL	52	754	**148B5410**
25	1	SVA-S 25 D STR CAP	52	754	**148B5411**
32	1 ¼	SVA-S 32 D STR H-WHEEL	52	754	**148B5510**
32	1 ¼	SVA-S 32 D STR CAP	52	754	**148B5511**
40	1 ½	SVA-S 40 D STR H-WHEEL	52	754	**148B5610**
40	1 ½	SVA-S 40 D STR CAP	52	754	**148B5611**
50	2	SVA-S 50 D STR H-WHEEL	52	754	**148B5710**
50	2	SVA-S 50 D STR CAP	52	754	**148B5711**
65	2 ½	SVA-S 65 D STR H-WHEEL	52	754	**148B5810**
65	2 ½	SVA-S 65 D STR CAP	52	754	**148B5811**
80	3	SVA-S 80 D STR H-WHEEL	52	754	**148B5910**
80	3	SVA-S 80 D STR CAP	52	754	**148B5911**
100	4	SVA-S 100 D STR H-WHEEL	52	754	**148B6010**
100	4	SVA-S 100 D STR CAP	52	754	**148B6011**
125	5	SVA-S 125 D STR H-WHEEL	52	754	**148B6110**
125	5	SVA-S 125 D STR CAP	52	754	**148B6111**
150	6	SVA-S 150 D STR H-WHEEL	52	754	**148B6210**
150	6	SVA-S 150 D STR CAP	52	754	**148B6211**
200	8	SVA-S 200 D STR H-WHEEL	52	754	**148B6310**
200	8	SVA-S 200 D STR CAP	52	754	**148B6311**
Butt-weld ANSI (B 36.10 Schedule 80)					
6	¼	SVA-S 6 A STR H-WHEEL	52	754	**148B5030**
6	¼	SVA-S 6 A STR CAP	52	754	**148B5031**
10	3/8	SVA-S 10 A STR H-WHEEL	52	754	**148B5130**
10	3/8	SVA-S 10 A STR CAP	52	754	**148B5131**
15	½	SVA-S 15 A STR H-WHEEL	52	754	**148B5230**
15	½	SVA-S 15 A STR CAP	52	754	**148B5231**
20	¾	SVA-S 20 A STR H-WHEEL	52	754	**148B5330**
20	¾	SVA-S 20 A STR CAP	52	754	**148B5331**
25	1	SVA-S 25 A STR H-WHEEL	52	754	**148B5430**
25	1	SVA-S 25 A STR CAP	52	754	**148B5431**
32	1 ¼	SVA-S 32 A STR H-WHEEL	52	754	**148B5530**
32	1 ¼	SVA-S 32 A STR CAP	52	754	**148B5531**
40	1 ½	SVA-S 40 A STR H-WHEEL	52	754	**148B5630**
40	1 ½	SVA-S 40 A STR CAP	52	754	**148B5631**
Butt-weld ANSI (B 36.10 Schedule 40)					
50	2	SVA-S 50 A STR H-WHEEL	52	754	**148B5730**
50	2	SVA-S 50 A STR CAP	52	754	**148B5731**
65	2 ½	SVA-S 65 A STR H-WHEEL	52	754	**148B5830**
65	2 ½	SVA-S 65 A STR CAP	52	754	**148B5831**
80	3	SVA-S 80 A STR H-WHEEL	52	754	**148B5930**
80	3	SVA-S 80 A STR CAP	52	754	**148B5931**
100	4	SVA-S 100 A STR H-WHEEL	52	754	**148B6030**
100	4	SVA-S 100 A STR CAP	52	754	**148B6031**
125	5	SVA-S 125 A STR H-WHEEL	52	754	**148B6130**
125	5	SVA-S 125 A STR CAP	52	754	**148B6131**
150	6	SVA-S 150 A STR H-WHEEL	52	754	**148B6230**
150	6	SVA-S 150 A STR CAP	52	754	**148B6231**
200	8	SVA-S 200 A STR H-WHEEL	52	754	**148B6330**
200	8	SVA-S 200 A STR CAP	52	754	**148B6331**
Butt-weld, GOST					
150	6	SVA-S 150 G STR H-WHEEL	52	754	**148B6250**
150	6	SVA-S 150 G STR CAP	52	754	**148B6251**
Socket welding ANSI (B 16.11)					
15	½	SVA-S 15 SOC STR H-WHEEL	52	754	**148B5232**
15	½	SVA-S 15 SOC STR CAP	52	754	**148B5233**
20	¾	SVA-S 20 SOC STR H-WHEEL	52	754	**148B5332**
20	¾	SVA-S 20 SOC STR CAP	52	754	**148B5333**
25	1	SVA-S 25 SOC STR H-WHEEL	52	754	**148B5432**
25	1	SVA-S 25 SOC STR CAP	52	754	**148B5433**
32	1 ¼	SVA-S 32 SOC STR H-WHEEL	52	754	**148B5532**
32	1 ¼	SVA-S 32 SOC STR CAP	52	754	**148B5533**
40	1 ½	SVA-S 40 SOC STR H-WHEEL	52	754	**148B5632**
40	1 ½	SVA-S 40 SOC STR CAP	52	754	**148B5633**
50	2	SVA-S 50 SOC STR H-WHEEL	52	754	**148B5732**
50	2	SVA-S 50 SOC STR CAP	52	754	**148B5733**

© Danfoss | DCS (mwa) | 2018.11

Ordering SVA-S complete valves

ANG = Angleway
STR = Straightway

CAP = Cap
H-WHEEL = Hand wheel

FPT inside pipe thread, NPT (ANSI/ASME B 1.20.1)

15	½	SVA-S 15 FPT ANG H-WHEEL	52	754	**148B5224**
15	½	SVA-S 15 FPT ANG CAP	52	754	**148B5225**
20	¾	SVA-S 20 FPT ANG H-WHEEL	52	754	**148B5324**
20	¾	SVA-S 20 FPT ANG CAP	52	754	**148B5325**
25	1	SVA-S 25 FPT ANG H-WHEEL	52	754	**148B5424**
25	1	SVA-S 25 FPT ANG CAP	52	754	**148B5425**
32	1 ¼	SVA-S 32 FPT ANG H-WHEEL	52	754	**148B5524**
32	1 ¼	SVA-S 32 FPT ANG CAP	52	754	**148B5525**

T outside pipe thread, (ISO 228/1)

6	¼	SVA-S 6 T ANG CAP	52	754	**148B5032**

FPT inside pipe thread, NPT (ANSI/ASME B 1.20.1)

15	½	SVA-S 15 FPT STR H-WHEEL	52	754	**148B5234**
15	½	SVA-S 15 FPT STR CAP	52	754	**148B5235**
20	¾	SVA-S 20 FPT STR H-WHEEL	52	754	**148B5334**
20	¾	SVA-S 20 FPT STR CAP	52	754	**148B5335**
25	1	SVA-S 25 FPT STR H-WHEEL	52	754	**148B5434**
25	1	SVA-S 25 FPT STR CAP	52	754	**148B5435**
32	1 ¼	SVA-S 32 FPT STR H-WHEEL	52	754	**148B5534**
32	1 ¼	SVA-S 32 FPT STR CAP	52	754	**148B5535**

Ordering SVA-L complete valves

Example:
SVA-L 20 DIN angleway with hand wheel = **148B5340**

Important!
Where products need to be certified according to specific certification societies or where higher pressures are required, the relevant information should be included at the time of order.

ANG = Angleway
STR = Straightway

CAP = Cap
H-WHEEL = Hand wheel

SVA-L Angleway

Butt-weld DIN (EN 10220)

Size [mm]	Size [in]	Type	MWP [bar]	MWP [psi]	Code number
15	½	SVA-L 15 D ANG H-WHEEL	52	754	**148B5240**
15	½	SVA-L 15 D ANG CAP	52	754	**148B5241**
20	¾	SVA-L 20 D ANG H-WHEEL	52	754	**148B5340**
20	¾	SVA-L 20 D ANG CAP	52	754	**148B5341**
25	1	SVA-L 25 D ANG H-WHEEL	52	754	**148B5440**
25	1	SVA-L 25 D ANG CAP	52	754	**148B5441**
32	1 ¼	SVA-L 32 D ANG H-WHEEL	52	754	**148B5540**
32	1 ¼	SVA-L 32 D ANG CAP	52	754	**148B5541**
40	1 ½	SVA-L 40 D ANG H-WHEEL	52	754	**148B5640**
40	1 ½	SVA-L 40 D ANG CAP	52	754	**148B5641**

Butt-weld ANSI (B 36.10 Schedule 80)

15	½	SVA-L 15 A ANG H-WHEEL	52	754	**148B5260**
15	½	SVA-L 15 A ANG CAP	52	754	**148B5261**
20	¾	SVA-L 20 A ANG H-WHEEL	52	754	**148B5360**
20	¾	SVA-L 20 A ANG CAP	52	754	**148B5361**
25	1	SVA-L 25 A ANG H-WHEEL	52	754	**148B5460**
25	1	SVA-L 25 A ANG CAP	52	754	**148B5461**
32	1 ¼	SVA-L 32 A ANG H-WHEEL	52	754	**148B5560**
32	1 ¼	SVA-L 32 A ANG CAP	52	754	**148B5561**
40	1 ½	SVA-L 40 A ANG H-WHEEL	52	754	**148B5660**
40	1 ½	SVA-L 40 A ANG CAP	52	754	**148B5661**

Socket welding ANSI (B 16.11)

15	½	SVA-L 15 SOC ANG H-WHEEL	52	754	**148B5262**
15	½	SVA-L 15 SOC ANG CAP	52	754	**148B5263**
20	¾	SVA-L 20 SOC ANG H-WHEEL	52	754	**148B5362**
20	¾	SVA-L 20 SOC ANG CAP	52	754	**148B5363**
25	1	SVA-L 25 SOC ANG H-WHEEL	52	754	**148B5462**
25	1	SVA-L 25 SOC ANG CAP	52	754	**148B5463**
32	1 ¼	SVA-L 32 SOC ANG H-WHEEL	52	754	**148B5562**
32	1 ¼	SVA-L 32 SOC ANG CAP	52	754	**148B5563**
40	1 ½	SVA-L 40 SOC ANG H-WHEEL	52	754	**148B5662**
40	1 ½	SVA-L 40 SOC ANG CAP	52	754	**148B5663**

FPT inside pipe thread, NPT (ANSI/ASME B 1.20.1)

15	½	SVA-L 15 FPT ANG H-WHEEL	52	754	**148B5264**
15	½	SVA-L 15 FPT ANG CAP	52	754	**148B5265**
20	¾	SVA-L 20 FPT ANG H-WHEEL	52	754	**148B5364**
20	¾	SVA-L 20 FPT ANG CAP	52	754	**148B5365**
25	1	SVA-L 25 FPT ANG H-WHEEL	52	754	**148B5464**
25	1	SVA-L 25 FPT ANG CAP	52	754	**148B5465**
32	1 ¼	SVA-L 32 FPT ANG H-WHEEL	52	754	**148B5564**
32	1 ¼	SVA-L 32 FPT ANG CAP	52	754	**148B5565**

SVA-L Straightway

Butt-weld DIN (EN 10220)

Size [mm]	Size [in]	Type	MWP [bar]	MWP [psi]	Code number
15	½	SVA-L 15 D STR H-WHEEL	52	754	**148B5250**
15	½	SVA-L 15 D STR CAP	52	754	**148B5251**
20	¾	SVA-L 20 D STR H-WHEEL	52	754	**148B5350**
20	¾	SVA-L 20 D STR CAP	52	754	**148B5351**
25	1	SVA-L 25 D STR H-WHEEL	52	754	**148B5450**
25	1	SVA-L 25 D STR CAP	52	754	**148B5451**
32	1 ¼	SVA-L 32 D STR H-WHEEL	52	754	**148B5550**
32	1 ¼	SVA-L 32 D STR CAP	52	754	**148B5551**
40	1 ½	SVA-L 40 D STR H-WHEEL	52	754	**148B5650**
40	1 ½	SVA-L 40 D STR CAP	52	754	**148B5651**

Butt-weld ANSI (B 36.10 Schedule 80)

15	½	SVA-L 15 A STR H-WHEEL	52	754	**148B5270**
15	½	SVA-L 15 A STR CAP	52	754	**148B5271**
20	¾	SVA-L 20 A STR H-WHEEL	52	754	**148B5370**
20	¾	SVA-L 20 A STR CAP	52	754	**148B5371**
25	1	SVA-L 25 A STR H-WHEEL	52	754	**148B5470**
25	1	SVA-L 25 A STR CAP	52	754	**148B5471**
32	1 ¼	SVA-L 32 A STR H-WHEEL	52	754	**148B5570**
32	1 ¼	SVA-L 32 A STR CAP	52	754	**148B5571**
40	1 ½	SVA-L 40 A STR H-WHEEL	52	754	**148B5670**
40	1 ½	SVA-L 40 A STR CAP	52	754	**148B5671**

Socket welding ANSI (B 16.11)

15	½	SVA-L 15 SOC STR H-WHEEL	52	754	**148B5272**
15	½	SVA-L 15 SOC STR CAP	52	754	**148B5273**
20	¾	SVA-L 20 SOC STR H-WHEEL	52	754	**148B5372**
20	¾	SVA-L 20 SOC STR CAP	52	754	**148B5373**
25	1	SVA-L 25 SOC STR H-WHEEL	52	754	**148B5472**
25	1	SVA-L 25 SOC STR CAP	52	754	**148B5473**
32	1 ¼	SVA-L 32 SOC STR H-WHEEL	52	754	**148B5572**
32	1 ¼	SVA-L 32 SOC STR CAP	52	754	**148B5573**
40	1 ½	SVA-L 40 SOC STR H-WHEEL	52	754	**148B5672**
40	1 ½	SVA-L 40 SOC STR CAP	52	754	**148B5673**

FPT inside pipe thread, NPT (ANSI/ASME B 1.20.1)

15	½	SVA-L 15 FPT STR H-WHEEL	52	754	**148B5274**
15	½	SVA-L 15 FPT STR CAP	52	754	**148B5275**
20	¾	SVA-L 20 FPT STR H-WHEEL	52	754	**148B5374**
20	¾	SVA-L 20 FPT STR CAP	52	754	**148B5375**
25	1	SVA-L 25 FPT STR H-WHEEL	52	754	**148B5474**
25	1	SVA-L 25 FPT STR CAP	52	754	**148B5475**
32	1 ¼	SVA-L 32 FPT STR H-WHEEL	52	754	**148B5574**
32	1 ¼	SVA-L 32 FPT STR CAP	52	754	**148B5575**

Accessories

6T Nipple Kit solution

Code no.	
148B4245	ACCESSORY WELD.NIPPLE DN6 A + UNION NUT
148B4184	ACCESSORY WELD.NIPPLE DN6 D + UNION NUT

Ordering SVA-S from the parts programme

Example
(select from table 1 and 2)

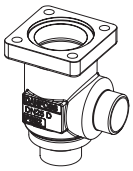

Valve housing, size 25 (1 in), DIN butt weld, angleway,
148B5452
Table 1

+

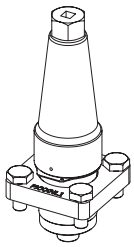

Top part, SVA-S size 25 (1 in) with cap
148B5476
Table 2

=

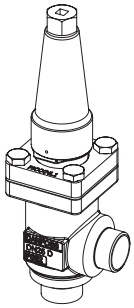

Table 1
SVL valve housings w/different connections

Please note:
Not all sizes available for SVA-L - see table 2.

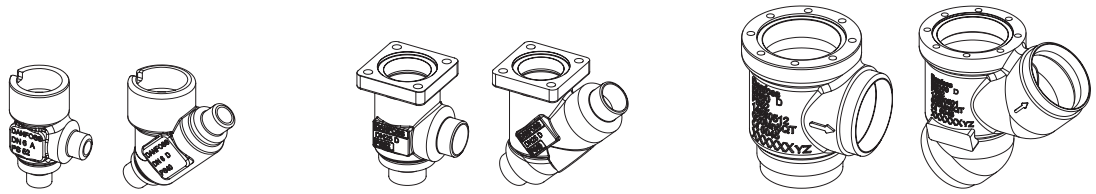

Sizes [DN]		Valve Housing SVL										
		DN 6-10 mm (¼ - ⅜ in)				DN 15-65 mm (½ - 2½ in)		DN 80-125 mm (3 - 5 in)				
		DIN-Butt weld		ANSI-Butt weld		GOST-Butt-weld		SOC		FPT		T
[mm]	[in]	ANG	STR	ANG	STR	ANG	STR	ANG	STR	ANG	STR	ANG
6	¼	148B5002	148B5003	148B5004	148B5005							148B5012
10	⅜	148B5122	148B5123	148B5124	148B5125	148B5134	148B5135					
15	½	148B5252	148B5253	148B5254	148B5255	148B5391	148B5392	148B5256	148B5257	148B5258	148B5259	
20	¾	148B5352	148B5353	148B5354	148B5355	148B5393	148B5394	148B5356	148B5357	148B5358	148B5359	
25	1	148B5452	148B5453	148B5454	148B5455	148B5498	148B5499	148B5456	148B5457	148B5458	148B5459	
32	1¼	148B5576	148B5577	148B5578	148B5579	148B5593	148B5594	148B5580	148B5581	148B5582	148B5583	
40	1½	148B5652	148B5653	148B5654	148B5655	148B5681	148B5682	148B5656	148B5657			
50	2	148B5741	148B5742	148B5743	148B5744	148B5759	148B5760	148B5745	148B5746			
65	2½	148B5816	148B5817	148B5818	148B5819	148B5816	148B5817					
80	3	148B5912	148B5913	148B5914	148B5915	148B5912	148B5913					
100	4	148B6014	148B6015	148B6016	148B6017	148B6033	148B6034					
125	5	148B6112	148B6113	148B6114	148B6115	148B6133	148B6134					

Table 2
SVA complete top part including gaskets and bolts

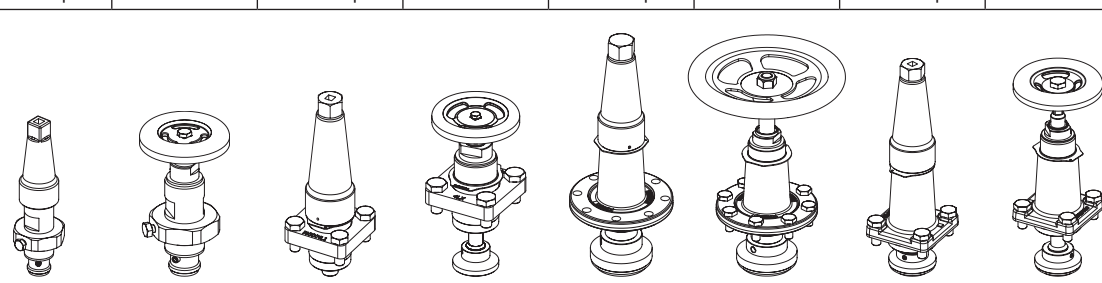

Sizes [DN]		Complete top part			
		SVA-S 6-10 with cap	SVA-S 6-10 with h-wheel	SVA-S 15-65 with cap	SVA-S 15-65 with h-wheel
[mm]	[in]	SVA-S CAP	SVA-S H-WHEEL	SVA-L CAP	SVA-L H-WHEEL
6	¼	148B5013	148B5014		
10	⅜				
15	½	148B5276	148B5277	148B5278	148B5279
20	¾				
25	1	148B5476	148B5477	148B5478	148B5479
32	1¼				
40	1½				
50	2	148B5728	148B5729		
65	2½	148B5822	148B5823		
80	3	148B5916	148B5917		
100	4	148B6012	148B6018		
125	5	148B6116	148B6117		

© Danfoss | DCS (mwa) | 2018.11

ENGINEERING
TOMORROW

Shut-off valves

Types SVA-S and SVA-L, 65 bar (943 psi)

Contents **Page**

Features 27
Technical data 28
Design 28
Material specification 29
Dimensions and weights 35
Connections 40
Ordering 40

AI273641142831en-000102 | 2018.08

ENGINEERING
TOMORROW

Shut-off valves

Types SVA-S and SVA-L, 65 bar (943 psi)

SVA shut-off valves are available in angleway and straightway versions and with Standard neck (SVA-S) and Long neck (SVA-L)

The shut-off valves are designed to meet all industrial refrigeration and ammonia heat pump application requirements and are designed to give favourable
flow characteristics and are easy to dismantle and repair when necessary.

The valve cone is designed to ensure perfect closing and withstand a high system pulsation and vibration, which can be present specifically in the discharge line.

Features

- Modular Concept:
  - Each valve housing is available with DIN and ANSI butt weld connection and in several different sizes.
  - Possible to convert SVA-S or SVA-L to any other product in the Flexline™ SVL family (regulating valve, check & stop valve, check valve or strainer) just by replacing the complete top part.
- Fast and easy valve overhaul service. It is easy to replace the top part and no welding is needed.
- Optional accessories:
  - Heavy duty industrial hand wheel for frequent operation.
  - Cap for infrequent operation.
- Available in angleway and straightway versions with Standard neck or Long neck (DN 15 to DN 40) for insulated systems.
- Each valve type is clearly marked with type, size and performance range.
- The valves and caps are prepared for sealing, to prevent operation by unauthorized persons, using a seal wire.
- Internal metal backseating:
  - DN 6 - 65 (¼ - 2½ in.)

  Internal PTFE backseating:
  - DN 80 - 200 (3 - 8 in.)
- Can accept flow in both directions.
- Housing and bonnet material is low temperature steel according to requirements of the Pressure Equipment Directive and other international classification authorities.
- Equipped with 42CrMo5 bolts to withstand high pressure.
- Classification: DNV, CRN, BV, EAC etc.
  To get an updated list of certification on the products please contact your local Danfoss Sales Company.

Technical data

- *Refrigerants*
  Applicable to HCFC, HFC, R717 (Ammonia), R744 (CO_2) and flammable refrigerants.
  For further information please see installation guide for SVA.
- *Temperature range*
  –60/+150°C (–76/+302°F).
- *Max. working pressure*
  65 bar (943 psi)

Design

Housing
Made of special, cold resistant steel.

Valve cone
The valve cone can be turned on the spindle, thus there will be no friction between the cone and the seat when the valve is opened and closed and the special design will avoid cone spin due to pulsation and vibration when the valve is in open position. A teflon tightening ring provides perfect sealing with minimum closing force.

Spindle
Made of polished stainless steel, ideal for leap seal sealing.

Packing gland
The low temperature packing gland ensures a perfect tightness in the range: –60/+150°C (–76/+302°F). The packing glands are equipped with a scraper ring to prevent penetration of dirt and ice into the packing gland.

Installation
It is recommended that the valves be installed in the direction of flow indicated by the arrow on the valve body. The valve can be installed in the opposite direction but this slightly reduces the k_v-value (C_v-value).

The valve is designed to withstand high internal pressure. However, the piping system in general should be designed to avoid liquid traps and reduce the risk of hydraulic pressure caused by thermal expansion.

For further information refer to installation instructions for SVA.

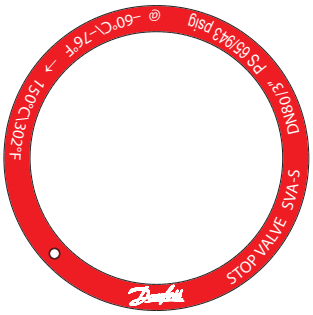

Example of Marking Ring

Pressure Equipment Directive (PED)
SVL valves are approved according to the European standard specified in the Pressure Equipment Directive and are CE marked.

For further details / restrictions - see Installation guide.

	SVL		
Nominal bore	DN≤ 25 mm (1 in.)	DN32-80 mm (1¼ - 3 in.)	DN100 - 200 mm (4-8 in.)
Classified for	Fluid group I		
Category	Article 3, paragraph 3	II	III

© Danfoss | DCS (mwa) | 2018.11

Material specification

SVA-S 6-10 (1/4 - 3/8 in.)

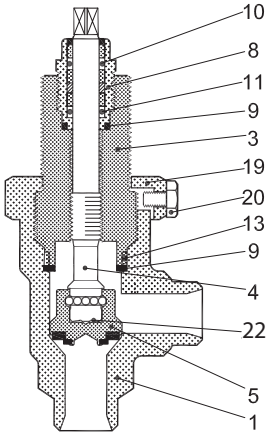

SVA-S 15-20 (1/2 - 3/4 in.)

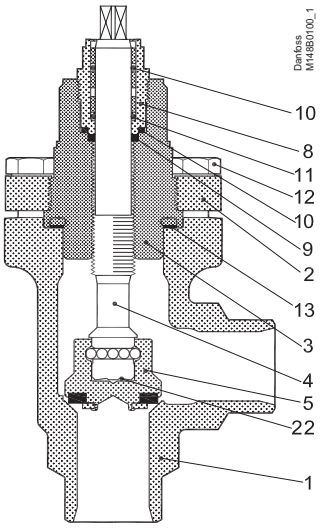

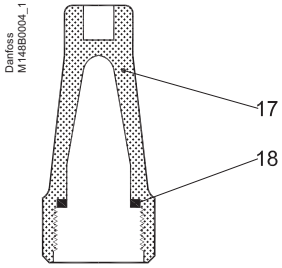

No.	Part	Material	EN	ISO	ASTM
1	Housing	Steel	G20Mn5QT, 10213-3 ---------- P285QH+QT, 10222-4		LCC, A352 ---------- LF2, A350
2	Bonnet, Flange	Steel	G20Mn5QT, 10213-3 ---------- P285QH+QT, 10222-4 ---------- P275NL, 10028-3		LCC, A352 ---------- LF2, A350
3	Bonnet, Insert	Steel	11SMn30 10087	Type 2 R 683/9	AISI 1213
4	Spindle	Stainless steel	X8CrNiS18-9 10088	Type 17 683/13	AISI 303
5	Cone	Steel	11SMn30 10087	Type 2 R 683/9	AISI 1213
8	Packing gland	Stainless steel	X8CrNiS18-9 10088	Type 17 683/13	AISI 303
9	Packing washer	Aluminium			
10	O-ring	Cloroprene (Neoprene)			
11	Spring loaded Teflon ring	PTFE			
12	Bolts	High temperature steel	42CrMo5 10269		A193
13	Gasket	Fiber, Non-asbestos			
17	Cap	Aluminium			
18	Gasket for cap	Nylon			
19	Locking nut	Steel			
20	Screw	Steel			
22	Disk spring	Steel			

Material specification

SVA-S 25-40 (1 - 1½ in.)

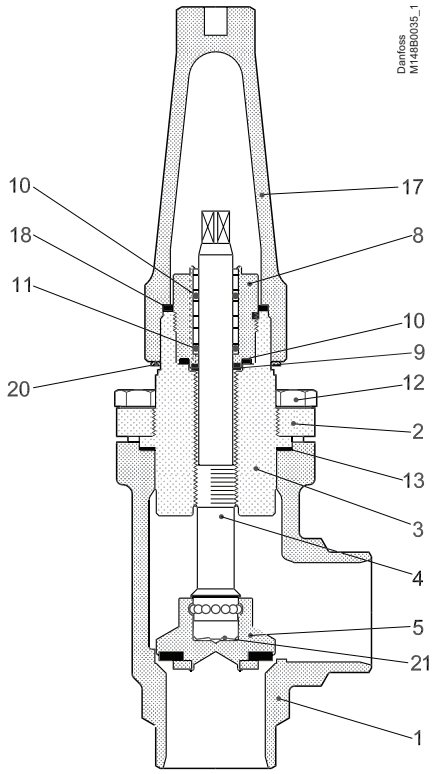

No.	Part	Material	EN	ISO	ASTM
1	Housing	Steel	G20Mn5QT, 10213-3 ---------- P285QH+QT, 10222-4		LCC, A352 ---------- LF2, A350
2	Bonnet, Flange	Steel	G20Mn5QT, 10213-3 ---------- P285QH+QT, 10222-4 ---------- P275NL, 10028-3		LCC, A352 ---------- LF2, A350
3	Bonnet, Insert	Steel	11SMn30 10087	Type 2 R 683/9	AISI 1213
4	Spindle	Stainless steel	X8CrNiS18-9 10088	Type 17 683/13	AISI 303
5	Cone	Steel	11SMn30 10087	Type 2 R 683/9	AISI 1213
8	Packing gland	Stainless steel	X8CrNiS18-9 10088	Type 17 683/13	AISI 303
9	Packing washer	Aluminium			
10	O-ring	Cloroprene (Neoprene)			
11	Spring loaded Teflon ring	PTFE			
12	Bolts	High temperature steel	42CrMo5 10269		A193
13	Gasket	Fiber, Non-asbestos			
17	Cap	Aluminium			
18	Gasket for cap	Nylon			
20	Identification ring	Stainless steel			
21	Disk spring	Steel			

© Danfoss | DCS (mwa) | 2018.11

Material specification

SVA-L 15 - 40 (½ - 1½ in.)

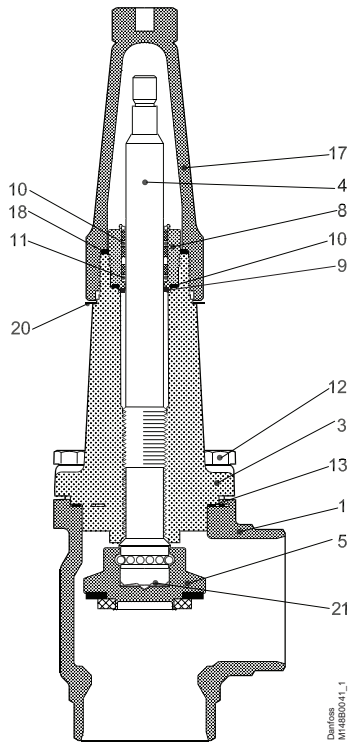

No.	Part	Material	EN	ISO	ASTM
1	Housing	Steel	G20Mn5QT, 10213-3 ---------- P285QH+QT, 10222-4		LCC, A352 ---------- LF2, A350
3	Valve bonnet	Steel	G20Mn5QT, 10213-3 ---------- P285QH+QT, 10222-4		LCC, A352 ---------- LF2, A350
4	Spindle	Stainless steel	X8CrNiS18-9 10088	Type 17 683/13	AISI 303
5	Cone	Steel	11SMn30 10087	Type 2 R 683/9	AISI 1213
8	Packing gland	Stainless steel	X8CrNiS18-9 10088	Type 17 683/13	AISI 303
9	Packing washer	Aluminium			
10	O-ring	Cloroprene (Neoprene)			
11	Spring loaded Teflon ring	PTFE			
12	Bolts	High temperature steel	42CrMo5 10269		A193
13	Gasket	Fiber, Non-asbestos			
17	Cap	Aluminium			
18	Gasket for cap	Nylon (PA6)			
20	Identification ring	Stainless steel			
21	Disk spring	Steel			

Material specification

SVA-S 50-65 (2 - 2½ in.)

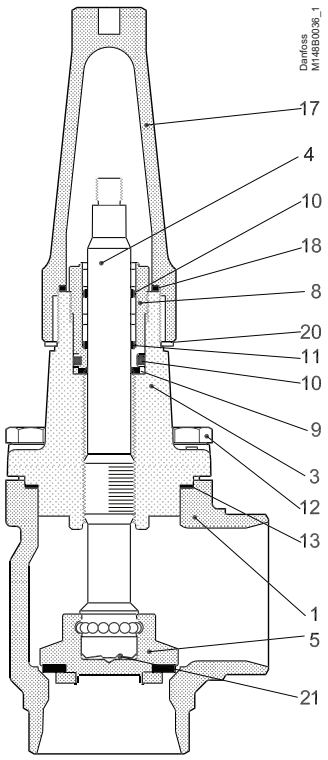

No.	Part	Material	EN	ISO	ASTM
1	Housing	Steel	G20Mn5QT, 10213-3 ---------- P285QH+QT, 10222-4		LCC, A352 ---------- LF2, A350
3	Valve bonnet	Steel	G20Mn5QT, 10213-3 ---------- P285QH+QT, 10222-4		LCC, A352 ---------- LF2, A350
4	Spindle	Stainless steel	X8CrNiS18-9 10088	Type 17 683/13	AISI 303
5	Cone	Steel	11SMn30 10087	Type 2 R 683/9	AISI 1213
8	Packing gland	Stainless steel	X8CrNiS18-9 10088	Type 17 683/13	AISI 303
9	Packing washer	Aluminium			
10	O-ring	Cloroprene (Neoprene)			
11	Spring loaded Teflon ring	PTFE			
12	Bolts	High temperature steel	42CrMo5 10269		A193
13	Gasket	Fiber, Non-asbestos			
17	Cap	Aluminium			
18	Gasket for cap	Nylon			
19	Locking nut	Steel			
20	Identification ring	Stainless steel			
21	Disk spring	Steel			

© Danfoss | DCS (mwa) | 2018.11

Material specification

SVA-S 80 - 150 (3 - 6 in.)

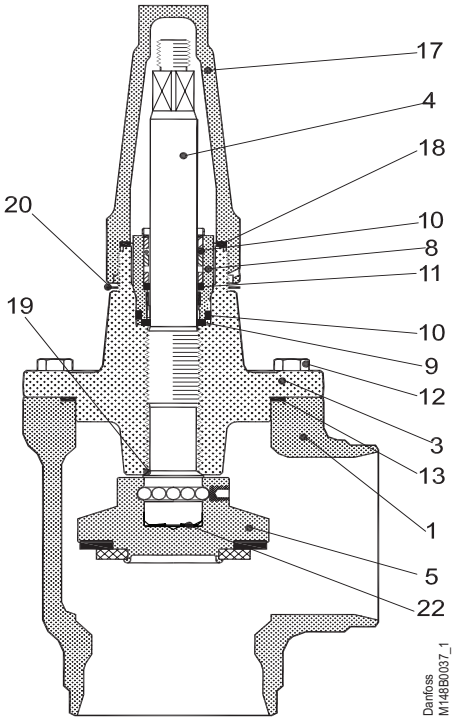

No.	Part	Material	EN	ISO	ASTM
1	Housing	Steel	G20Mn5QT 10213-3		LCC A352
3	Valve bonnet	Steel	G20Mn5QT, 10213-3 ---------- P285QH+QT, 10222-4		LCC, A352 ---------- LF2, A350
4	Spindle	Stainless steel	X5CrNi18-10 10088	Type 11, R 683/13	AISI 304, A276
5	Cone Cone seal	Steel Teflon (PTFE)	11SMn30 10087	Type 2, R 683/9	AISI 1213
8	Packing gland	Stainless steel	X8CrNiS18-9 10088	Type 17 R 683/13	AISI 303
9	Packing washer	Aluminium			
10	O-ring	Cloroprene (Neoprene)			
11	Spring loaded Teflon ring	PTFE			
12	Bolts	High temperature steel	42CrMo5 10269		A193
13	Gasket	Fiber, Non-asbestos			
17	Cap	Aluminium			
18	Gasket for cap	Nylon (PA 6)			
19	Soft backseat	Teflon (PTFE)			
20	Identification ring	Stainless steel			
22	Disk spring	Steel			

Material specification

SVA-S 200 (8 in.)

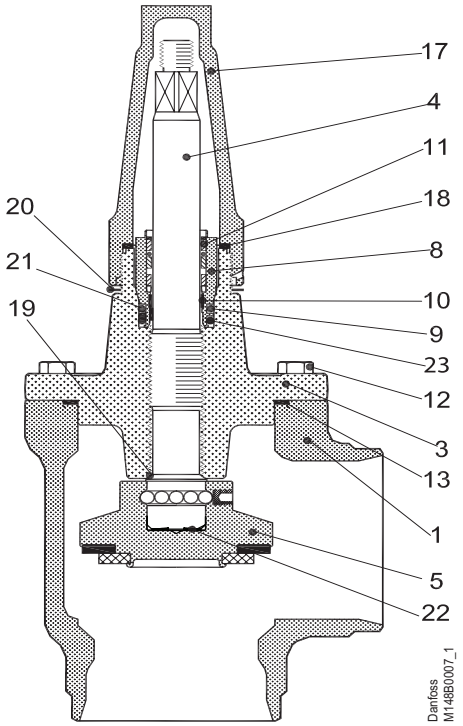

No.	Part	Material	EN	ISO	ASTM
1	Housing	Steel	G20Mn5QT 10213-3		LCC A352
3	Valve bonnet	Steel	G20Mn5QT, 10213-3 ---------- P285QH+QT, 10222-4		LCC, A352 ---------- LF2, A350
4	Spindle	Stainless steel	X5CrNi18-10 10088	Type 11, R 683/13	AISI 304, A276
5	Cone Cone seal	Steel Teflon (PTFE)	11SMn30 10087	Type 2, R 683/9	AISI 1213
8	Packing gland	Stainless steel	X8CrNiS18-9 10088	Type 17 R 683/13	AISI 303
9	O-ring	Cloroprene (Neoprene)			
10	Spring loaded Teflon ring	PTFE			
11	O-ring	Cloroprene (Neoprene)			
12	Bolts	High temperature steel	42CrMo5 10269		A193
13	Gasket	Fiber, Non-asbestos			
15	Washer	Stainless steel			
16	Nut	Stainless steel			
17	Cap	Aluminium			
18	Gasket for cap	Nylon (PA 6)			
19	Soft backseat	Teflon (PTFE)			
20	Identification ring	Stainless steel			
21	Wear ring	Teflon (PTFE)			
22	Disk spring	Steel			
23	O-ring	PTFE/Cloroprene (Neoprene)			

© Danfoss | DCS (mwa) | 2018.11

Dimensions and weights

SVA 6 - 10 in angle execution with cap

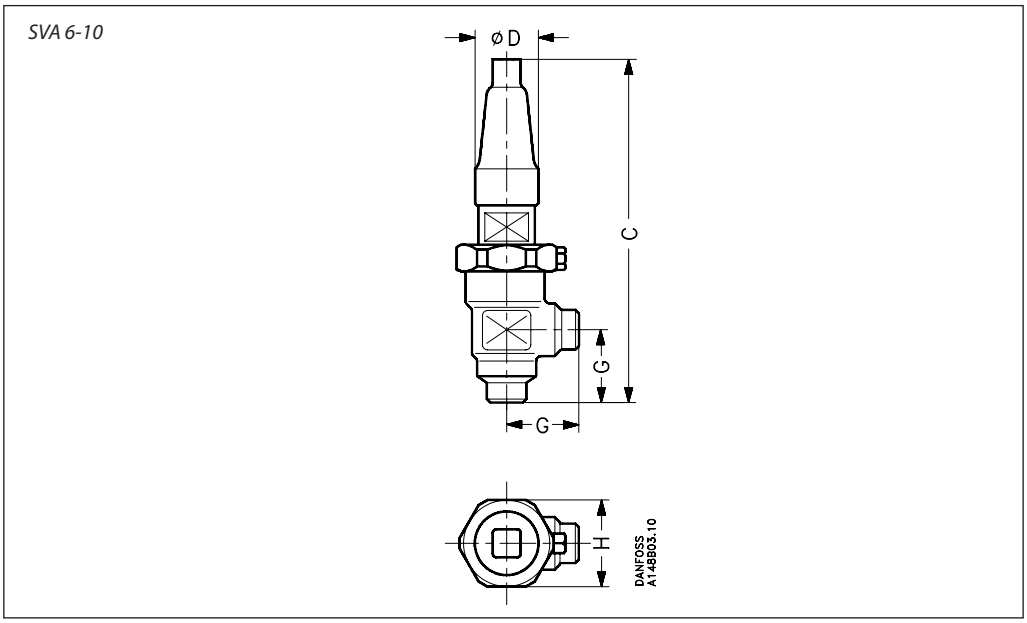

Valve size			C		G		∅D		□H		Weight
SVA 6	mm in.		139 5.47		30 1.18		30 1.18		48 1.89		0.8 kg
SVA 10	mm in.		182 7.17		45 1.77		38 1.50		60 2.36		1.4 kg

Specified weights are approximate values only.

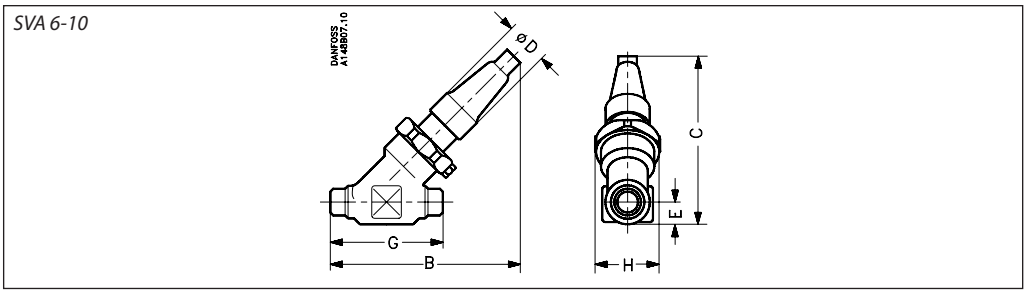

SVA 6 - 10 in straight-way execution with cap

Valve size			C	B	E	G	∅D		□H		Weight
SVA 6	mm in.		110 4.33	120 4.72	13 0.49	70 2.76	30 1.16		48 1.89		0.8 kg
SVA 10	mm in.		145 5.71	155 6.10	20 0.79	120 4.72	38 1.50		60 2.36		2.0 kg

Specified weights are approximate values only.

Dimensions and weights

SVA 15 - 40 (½ - 1½ in.) in angleway version with cap

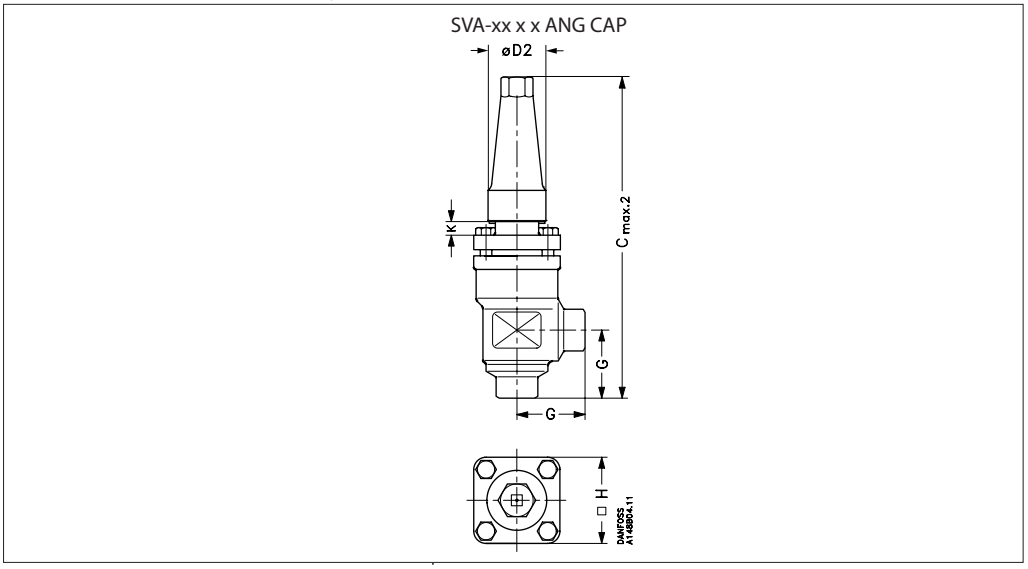

Valve size		K			$C_{max.2}$	G			$ØD_2$	□H		Weight
SVA-S												
SVA 15 - 20	mm	4			189	45			38	60		1.4 kg
SVA (½ - ¾)	in.	0.16			7.44	1.77			1.5	2.36		3.1 lb
SVA 25 - 40	mm	12			268	55			50	70		2.4 kg
SVA (1 - 1½)	in.	0.47			10.55	2.17			1.97	2.76		5.3 lb
SVA-L												
SVA 15 - 20	mm	63			248	45			38	60		1.4 kg
SVA (½ - ¾)	in.	2.48			9.76	1.77			1.5	2.36		3.1 lb
SVA 25 - 40	mm	74			330	55			50	70		2.4 kg
SVA (1 - 1½)	in.	2.91			12.99	2.17			1.97	2.76		5.3 lb

Specified weights are approximate values only.

SVA 15 - 40 (½ - 1½ in.) straightway version with cap

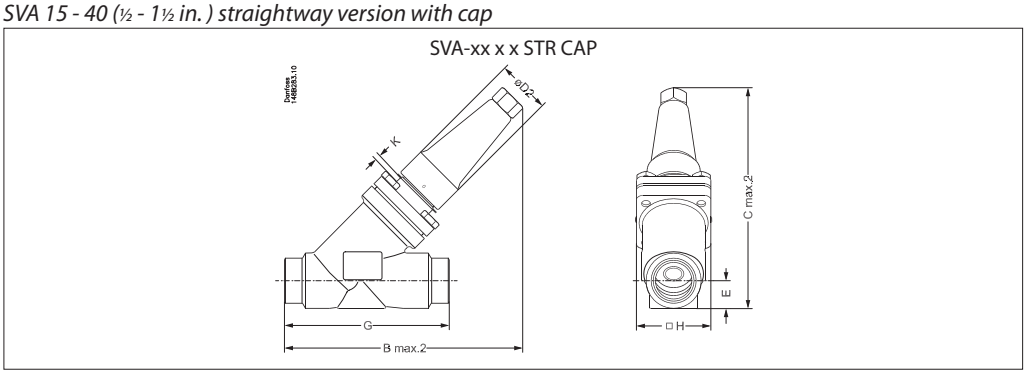

Valve size		K		$C_{max.2}$		$B_{max.2}$	E	G		$ØD_2$	□H	Weight
SVA-S												
SVA 15 - 20	mm	4		141		156	20	120		38	60	2.0 kg
SVA (½ - ¾)	in.	0.16		5.55		6.14	0.79	4.72		1.50	2.36	4.4 lb
SVA 25 - 40	mm	12		208		222	26	155		50	70	3.0 kg
SVA (1 - 1½)	in.	0.47		8.19		8.74	1.02	6.10		1.97	2.76	6.6 lb
SVA-L												
SVA 15 - 20	mm	63		184		198	20	120		38	60	2.0 kg
SVA (½ - ¾)	in.	2.48		7.24		7.80	0.79	4.72		1.50	2.36	4.4 lb
SVA 25 - 40	mm	74		252		265	26	155		50	70	3.0 kg
SVA (1 - 1½)	in.	2.91		9.92		10.43	1.02	6.10		1.97	2.76	6.6 lb

Specified weights are approximate values only.

© Danfoss | DCS (mwa) | 2018.11

Dimensions and weights

SVA 50 - 65 (2 - 2½ in.) in angleway version with cap

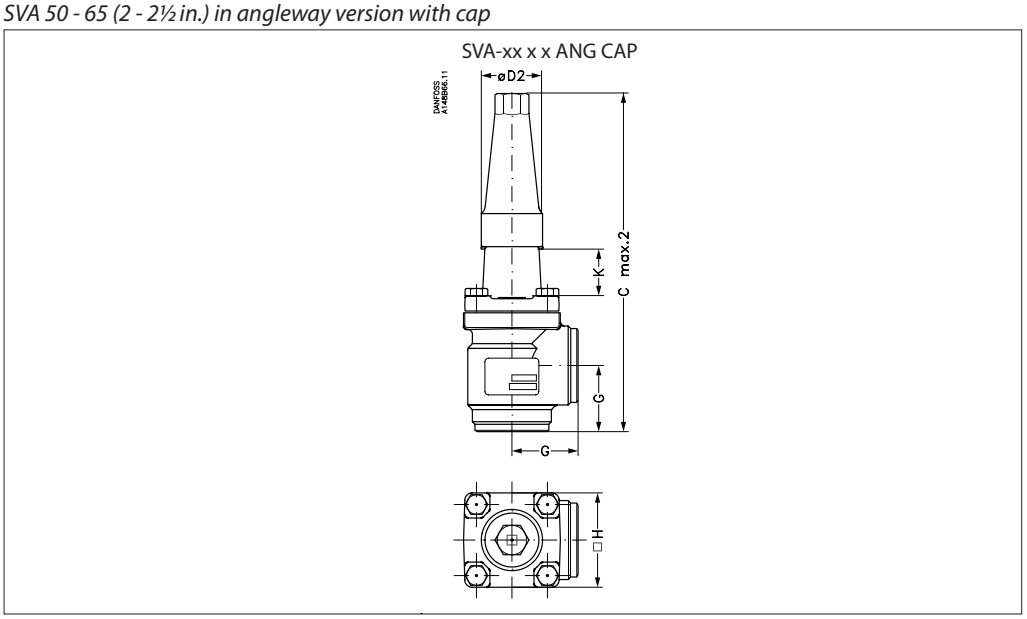

Valve size		K			$C_{max.2}$		G		$\varnothing D_2$	□H		Weight
SVA-S												
SVA 50	mm	70			315		60		50	77		3.2 kg
SVA (2)	in.	2.76			12.40		2.36		1.97	3.03		7.1 lb
SVA 65	mm	70			335		70		50	90		4.8 kg
SVA (2½)	in.	2.76			13.19		2.76		1.97	3.54		10.6 lb

Specified weights are approximate values only.

SVA 50 - 65 (2 - 2½ in.) in straightway version with cap

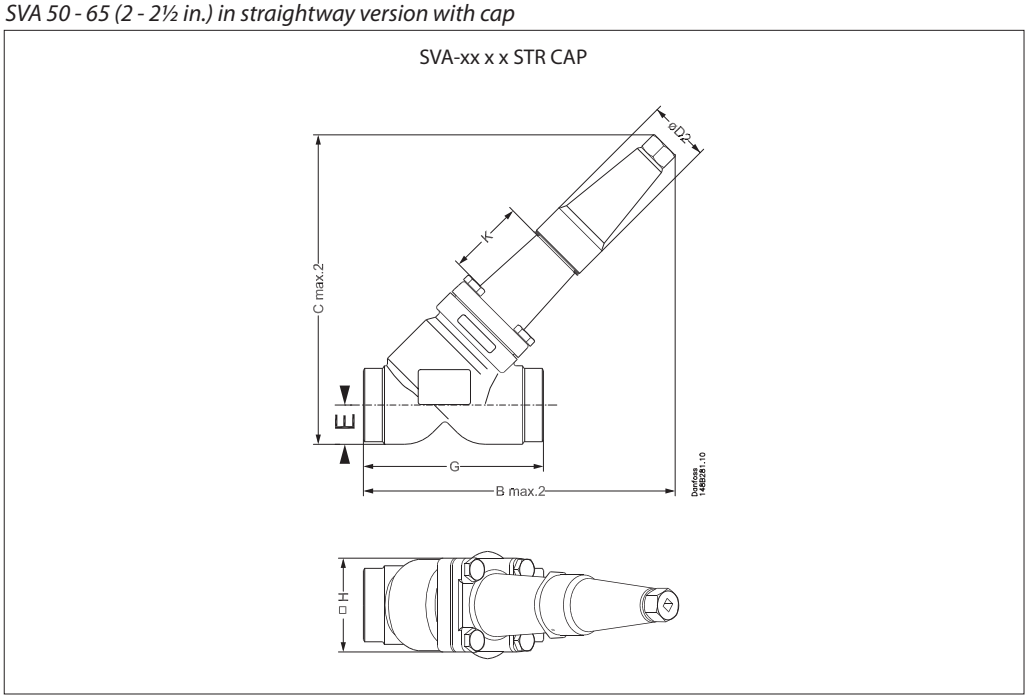

Valve size		K		$B_{max.2}$		$C_{max.2}$	E	G		$\varnothing D_2$	□H	Weight
SVA-S												
SVA 50	mm	70		259		257	32	148		50	77	4.2 kg
SVA (2)	in.	2.76		10.20		10.12	1.26	5.83		1.97	3.03	9.3 lb
SVA 65	mm	70		280		280	40	176		50	90	6.3 kg
SVA (2½)	in.	2.76		11.02		11.02	1.57	6.93		1.97	3.54	13.9 lb

Specified weights are approximate values only.

Dimensions and weights

SVA 80 - 200 (3 - 8 in.) angleway version with cap

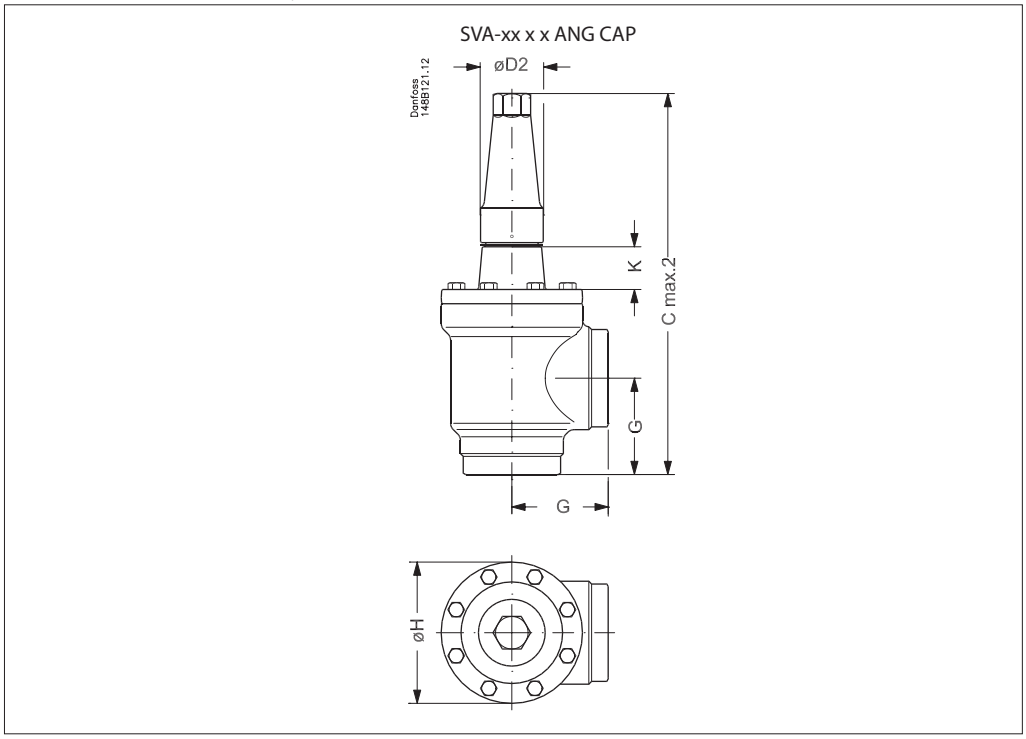

Valve size		K			$C_{max.2}$		G		$ØD_2$		ØH	Weight
SVA-S												
SVA 80	mm	76			388		90		58		129	9.7 kg
SVA (3)	in.	3.00			15.28		3.54		2.28		5.08	21.4 lb
SVA 100	mm	90			437		106		58		156	15.3 kg
SVA (4)	in.	3.54			17.20		4.17		2.28		6.14	33.7 lb
SVA 125	mm	90			533		128		74		193	28.1 kg
SVA (5)	in.	3.54			20.98		5.04		2.91		7.60	61.9 lb
SVA 150	mm	90			568		145		74		219	39.7 kg
SVA (6)	in.	3.54			22.36		5.71		2.91		8.62	87.5 lb
SVA 200	mm	90			678		180		86		276	79.5 kg
SVA (8)	in.	3.54			26.69		7.09		3.39		10.87	175.3 lb

Specified weights are approximate values only.

© Danfoss | DCS (mwa) | 2018.11

Dimensions and weights

SVA 80 - 200 (3 - 8 in.) straightway version with cap

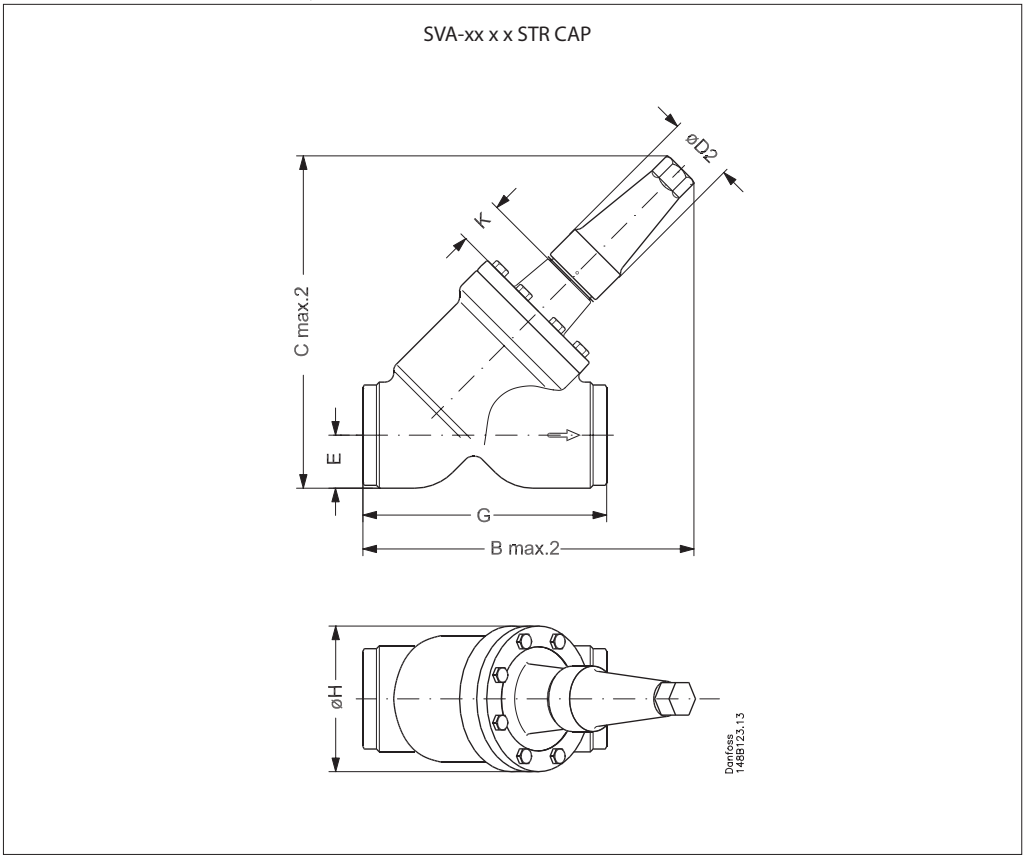

Valve size		K		$B_{max.2}$		$C_{max.2}$	E	G		∅D_2	∅H	Weight
SVA-S												
SVA 80	mm	76		321		322	48	216		58	129	10.9 kg
SVA (3)	in.	3.00		12.64		12.72	1.89	8.50		2.28	5.08	24.0 lb
SVA 100	mm	90		367		375	60	264		58	156	18.2 kg
SVA (4)	in.	3.54		14.45		14.76	2.36	10.39		2.28	6.14	40.1 lb
SVA 125	mm	90		444		456	74	322		74	193	32.8 kg
SVA (5)	in.	3.54		17.48		17.95	2.91	12.68		2.91	7.60	72.3 lb
SVA 150	mm	90		483		505	91	370		74	219	60.0 kg
SVA (6)	in.	3.54		19.02		19.88	3.58	14.57		2.91	8.62	132.3 lb
SVA 200	mm	90		579		613	117	464		86	276	111.5 kg
SVA (8)	in.	3.54		22.80		24.13	4.61	18.27		3.39	10.87	245.8 lb

Specified weights are approximate values only.

Connections

DIN

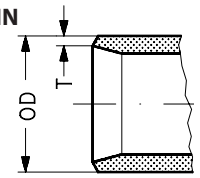

Butt-weld DIN (EN 10220)

Size mm	Size in.	OD mm	T mm	OD in.	T in.			k_v-angle m^3/h	k_v-straight m^3/h	C_v-angle USgal/min	C_v-straight USgal/min
6	¼	13.5	2.3	0.531	0.091			2.9	2.0	3.4	2.4
10	3/8	17.2	2.3	0.677	0.091			4.5	3.2	5.2	3.6
15	½	21.3	2.3	0.839	0.091			7.0	4.9	8.1	5.7
20	¾	26.9	2.3	1.059	0.091			14.6	10.2	16.9	11.8
25	1	33.7	2.6	1.327	0.103			24.8	17.4	28.8	20.2
32	1¼	42.4	2.6	1.669	0.102			42.6	29.8	49.4	34.6
40	1½	48.3	2.6	1.902	0.103			45.2	31.6	52.4	36.7
50	2	60.3	2.9	2.37	0.11			80	65	93	76
65	2½	76.1	2.9	3	0.11			120	97	140	113
80	3	88.9	3.2	3.50	0.13			182	152	211	176
100	4	114.3	3.6	4.50	0.14			313	278	363	323
125	5	139.7	4.0	5.50	0.16			514	470	596	545
150	6	168.3	4.5	6.63	0.18			785	597	911	693
200	8	219.1	6.3	8.63	0.25			1168	1024	1355	1188

ANSI

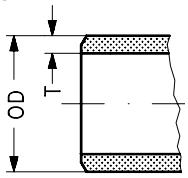

Size mm	Size in.	OD mm	T mm	OD in.	T in.			k_v-angle m^3/h	k_v-straight m^3/h	C_v-angle USgal/min	C_v-straight USgal/min
Butt-weld ANSI (B 36.10 Schedule 80)											
6	¼	13.5	3.0	0.531	0.118			2.9	2.03	3.4	2.4
10	3/8	17.2	3.2	0.677	0.126			4.5	3.15	5.2	3.6
15	½	21.3	3.7	0.839	0.146			7.0	4.9	8.1	5.7
20	¾	26.9	4.0	1.059	0.158			14.6	10.2	16.9	11.8
25	1	33.7	4.6	1.327	0.181			24.8	17.4	28.8	20.2
32	1¼	42.4	4.9	1.669	0.193			42.6	29.8	49.4	34.6
40	1½	48.3	5.1	1.902	0.201			45.2	31.6	52.4	36.7
Butt-weld ANSI (B 36.10 Schedule 40)											
50	2	60.3	3.9	2.37	0.15			80	65	93	76
65	2½	73.0	5.2	2.87	0.20			120	97	140	113
80	3	88.9	5.5	3.50	0.22			182	152	211	176
100	4	114.3	6.0	4.50	0.24			313	278	363	323
125	5	141.3	6.6	5.56	0.26			514	470	596	545
150	6	168.3	7.1	6.63	0.28			785	597	911	693
200	8	219.1	8.2	8.63	0.32			1168	1024	1355	1188

Ordering

Size [DN]	Parts Program					
	Housing				Top complete	
	ANG		STR		SVA-S (cap)	SVA-L (cap)
	DIN	ANSI	DIN	ANSI		
6	148B6689	148B6687	148B6693	148B6691	148B6695	
10	148B6690	148B6688	148B6694	148B6692		
15	148B6622	148B6612	148B6642	148B6632	148B6652	148B6659
20	148B6623	148B6613	148B6643	148B6633	148B6652	148B6659
25	148B6624	148B6614	148B6644	148B6634	148B6653	148B6660
32	148B6625	148B6615	148B6645	148B6635	148B6653	148B6660
40	148B6626	148B6616	148B6646	148B6636	148B6653	148B6660
50	148B6627	148B6617	148B6647	148B6637	148B6654	
65	148B6628	148B6618	148B6648	148B6638	148B6655	
80	148B6629	148B6619	148B6649	148B6639	148B6656	
100	148B6630	148B6620	148B6650	148B6640	148B6657	
125	148B6631	148B6621	148B6651	148B6641	148B6658	
150						
200						

Size [DN]	Complete valve			
	SVA-S (cap)			
	ANG		STR	
	DIN	ANSI	DIN	ANSI
6				
10				
15				
20				
25				
32				
40				
50				
65				
80				
100				
125				
150	148B6665	148B6667	148B6666	148B6668
200	148B6673	148B6675	148B6674	148B6676

© Danfoss | DCS (mwa) | 2018.11

ENGINEERING
TOMORROW

Shut-off valves in stainless steel
Type SVA-S SS

Contents **Page**

Features 43
Pressure and temperature range 44
Design 44
Technical data 44
Connections 45
Material specification 46
Dimensions and weights 50
Ordering 53

AI234986440234en-000701 | 2017.06

ENGINEERING
TOMORROW

Shut-off valves in stainless steel
Type SVA-S SS and SVA-L SS

In certain specific areas such as outdoor applications and corrosive atmospheres, such as coastal installations, there is a need for high surface protection to prevent failure due to corrosion.

Today's food safety standards often call for daily treatment with detergents to protect against bacteria growth, again producing a need for high surface protection.

SVA-S SS are angleway and straightway stainless steel shut-off valves, which are designed to meet all industrial refrigeration application requirements.

The valves are designed to give favourable flow characteristics and are easy to dismantle and repair when necessary. The valve cone is designed to ensure perfect closing.

Features

- Applicable to HCFC, HFC, R717 (Ammonia), R744 (CO_2) and all flammable refrigerants.
- Optional accessories:
  - Heavy duty industrial hand wheel for frequent operation.
  - Cap for infrequent operation.
- Available in angleway and straightway versions with Standard neck or Long neck (DN 15 to DN 40) for insulated systems.
- Designed to give favourable flow conditions.
- Internal backseating enables replacement of the spindle seal whilst the valve is active, i.e. under pressure.
- Housing is made of stainless steel approved for low temperature operations.
- Easy to disassemble for inspection and service.
- SVA-S/L SS shut-off valves can accept flow in either direction.
- Butt-weld DIN and ANSI connections.
- Maximum allowable working pressure and temperature range:

DN 15-65	52 bar (754 psi) at –60°C/+50°C (–76°F/+122°F)
DN 80-125	50 bar (725 psi) at –60°C/+50°C (–76°F/+122°F)

  For SVA-S/L SS see the relation between PS and temperature in the curve on page 2.
- Temperature range: –60/+150°C (–76 +302°F).
- Compact and light valves for easy handling and installation.
- Classification: DNV, CRN, BV, EAC etc. To get an updated list of certification on the products please contact your local Danfoss Sales Company.

Pressure and temperature range

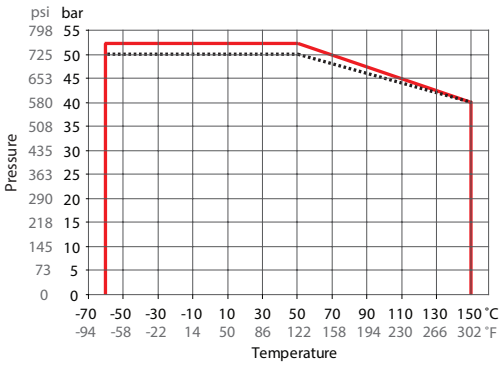

SVA-S/L SS DN15-DN65
SVA-S SS DN80 - DN125

Design

Connections
Available with the following connections:

- Butt-weld DIN (EN 10220)
  DN 15 - 125 (½ - 5 in.)
- Butt-weld ANSI (B 36.19M)
  DN 15 - 100 (½ - 4 in.)

Housing
Made of stainless steel approved for low temperature operations.

Valve cone
The valve cone can be turned on the spindle, thus there will be no friction between the cone and the seat, when the valve is opened and closed. A teflon tightening ring provides perfect sealing at a minimum closing momentum.

Spindle
Made of polished stainless steel, ideal for O-ring sealing. Furthermore, parts of the spindle are heat treated to obtain anti-abrasive/adhesive properties.

Packing gland
The stainless steel packing gland comprises a spring loaded seal packing gland which ensures a perfect tightness in the range: –60/+150°C (–76/+302°F).
The packing glands are equipped with a scraper ring to prevent penetration of dirt and ice into the packing gland.

Pressure Equipment Directive (PED)
The stainless steel valves are approved and CE marked in accordance with the Pressure Equipment Directive - 97/23/EC.

Installation
It is recommended that the valves be installed in the direction of flow indicated by the arrow on the valve body. The valve can be installed in the opposite direction but this slightly reduces the k_v-value (C_v-value).

The valve is designed to withstand high internal pressure. However, the piping system in general should be designed to avoid liquid traps and reduce the risk of hydraulic pressure caused by thermal expansion.

For further information refer to installation instructions for SVA-S/L SS.

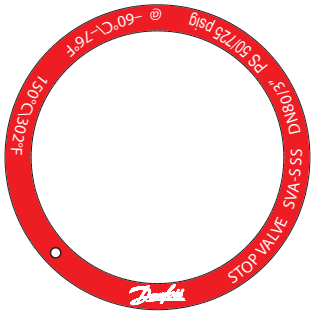

Example of Marking Ring

SVA-S/L SS			
Nominal bore	DN≤ 25 mm (1 in.)	DN32-80 mm (1¼ - 3 in.)	DN100 - 125 mm (4-5 in.)
Classified for	Fluid group I		
Category	Article 3, paragraph 3	II	III

Technical data

- *Refrigerants*
  Applicable to HCFC, HFC, R717 (Ammonia), R744 (CO_2) and all flammable refrigerants. For further information please contact your local Danfoss Sales Company.
- *Temperature Range*
  –60/+150°C (–76/+302°F).
- *Pressure range*
  The valves are designed for max. working pressure 52 bar g (754 psi g).

© Danfoss | DCS (mwa) | 2018.11

Connections

DIN

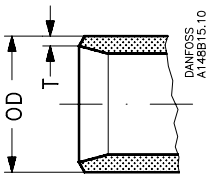

ANSI

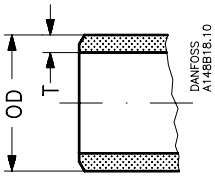

Size		OD	T
Butt-weld DIN (EN 10220)			
15	mm	21.3	2.3
½	in.	0.839	0.091
20	mm	26.9	2.3
¾	in	1.059	0.091
25	mm	33.7	2.6
1	in.	1.327	0.103
32	mm	42.4	2.6
1¼	in.	1.669	0.102
40	mm	48.3	2.6
1½	in.	1.902	0.103
50	mm	60.3	2.9
2	in.	2.37	0.11
65	mm	76.1	2.9
2½	in.	3	0.11
80	mm	88.9	3.2
3	in.	3.50	0.13
100	mm	114.3	3.6
4	in.	4.50	0.14
125	mm	139.7	4.0
5	in.	5.50	0.16

Size		OD	T
Butt-weld ANSI (B 36.19M, SCHEDULE 40)			
15	mm	21.3	2.8
½	in.	0.839	0.11
20	mm	26.9	2.9
¾	in	1.06	0.11
25	mm	33.7	3.5
1	in.	1.33	0.14
32	mm	42.4	3.6
1¼	in.	1.67	0.14
40	mm	48.3	3.7
1½	in.	1.9	0.15
Butt-weld ANSI (B 36.19M, SCHEDULE 10)			
50	mm	60.3	2.8
2	in.	2.37	0.11
65	mm	73	3.1
2½	in.	2.87	0.12
80	mm	88.9	3.1
3	in.	3.5	0.12
100	mm	114.3	3.1
4	in.	4.5	0.12

Material specification

SVA-S SS 15-40 (½ - 1½ in.)

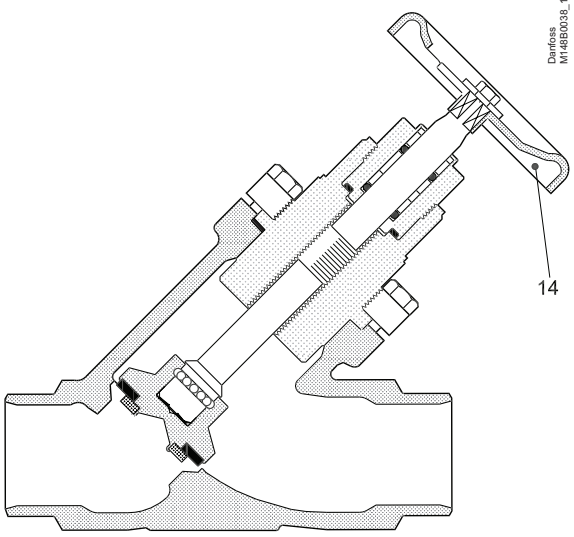

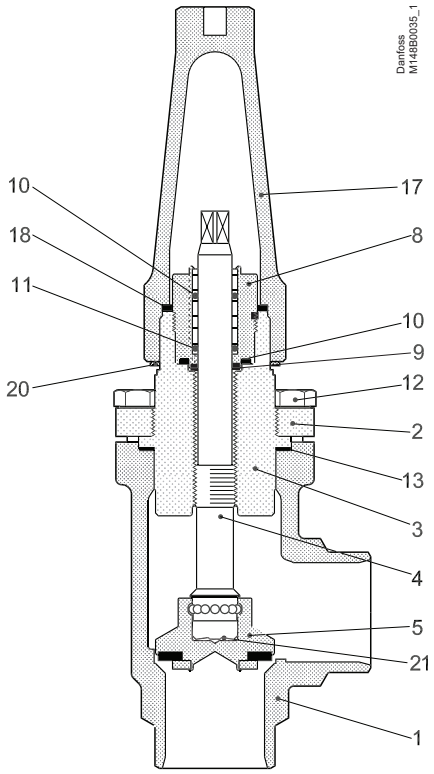

No.	Part	Material	EN	ISO	ASTM
1	Housing	Stainless steel	GX5CrNi19-10 EN10213-4		AISI 304
2	Bonnet, Flange	Stainless steel	X5CrNi18-10 EN10088		AISI 304
3	Bonnet, Insert	Stainless steel	X8CrNiS18-9 DIN 17440		AISI 303
4	Spindle	Stainless steel	X8CrNiS18-9 DIN 17440	Type 17, 683/13	AISI 303
5	Cone	Steel			
8	Packing gland	Stainless steel	X8CrNiS18-9 10088	Type 17 683/13	AISI 303
9	Packing washer	Aluminium			
10	O-ring	Cloroprene (Neoprene)			
11	Spring loaded Teflon ring	PTFE			
12	Bolts	Stainless steel	A2-70	A2-70	Type 308
13	Gasket	Fiber, Non-asbestos			
14	Handwheel	Steel			
17	Cap	Aluminium			
18	Gasket for cap	Nylon			
20	Identification ring	Stainless steel			
21	Disk spring	Steel			

© Danfoss | DCS (mwa) | 2018.11

Material specification

SVA-L SS 15 - 40 (½ - 1½ in.)

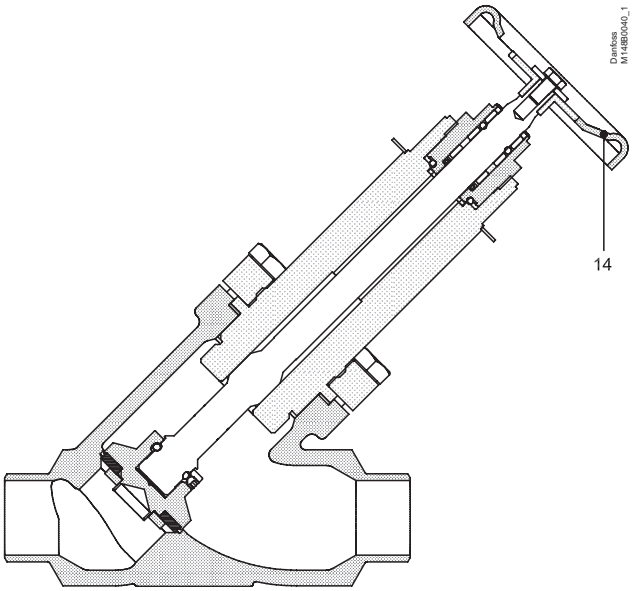

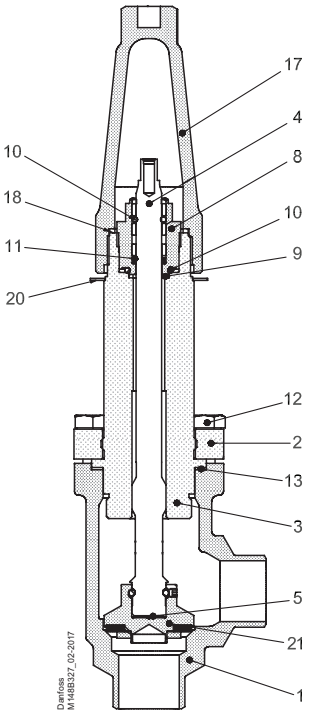

No.	Part	Material	EN	ISO	ASTM
1	Housing	Stainless steel	GX5CrNi19-10 EN10213-4		AISI 304
2	Bonnet, Flange	Stainless steel	X5CrNi18-10 EN10088		AISI 304
3	Bonnet, Insert	Stainless steel	X8CrNiS18-9 DIN 17440		AISI 303
4	Spindle	Stainless steel	X8CrNiS18-9 DIN 17440	Type 17, 683/13	AISI 303
5	Cone	Steel			
8	Packing gland	Stainless steel	X8CrNiS18-9 10088	Type 17 683/13	AISI 303
9	Packing washer	Aluminium			
10	O-ring	Cloroprene (Neoprene)			
11	Spring loaded Teflon ring	PTFE			
12	Bolts	Stainless steel	A2-70	A2-70	Type 308
13	Gasket	Fiber, Non-asbestos			
14	Handwheel	Steel			
17	Cap	Aluminium			
18	Gasket for cap	Nylon			
20	Identification ring	Stainless steel			
21	Disk spring	Steel			

Material specification

SVA-S SS 50-65 (2 - 2½ in.)

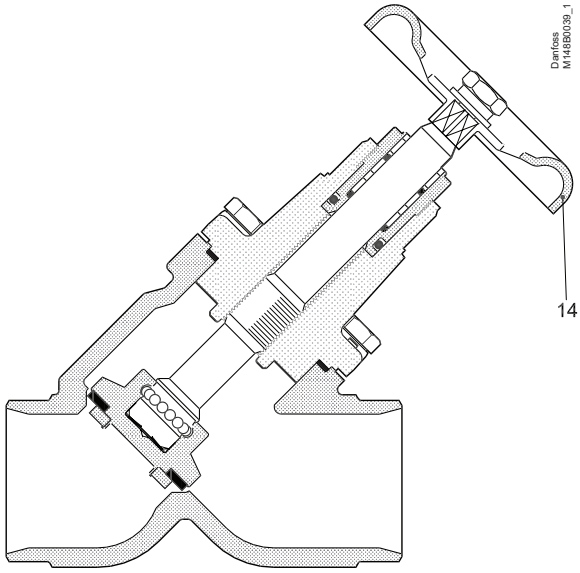

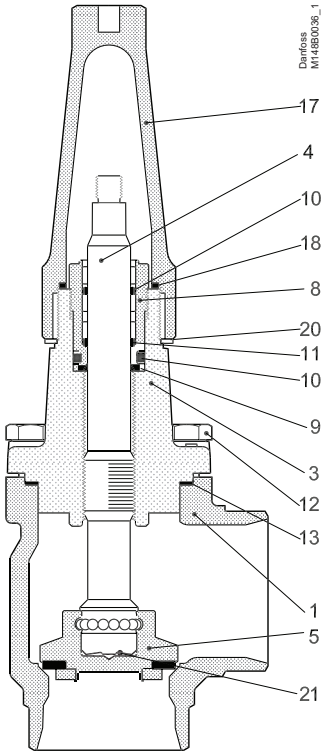

No.	Part	Material	EN	ISO	ASTM
1	Housing	Stainless steel	GX5CrNi19-10 EN10213-4		AISI 304
3	Valve bonnet	Stainless steel	GX5CrNi19-10 EN10213-4		AISI 304
4	Spindle	Stainless steel	X8CrNiS18-9 DIN 17440	Type 17, 683/13	AISI 303
5	Cone	Steel			
8	Packing gland	Stainless steel	X8CrNiS18-9 10088	Type 17 683/13	AISI 303
9	Packing washer	Aluminium			
10	O-ring	Cloroprene (Neoprene)			
11	Spring loaded Teflon ring	PTFE			
12	Bolts	Stainless steel	A2-70	A2-70	Type 308
13	Gasket	Fiber, Non-asbestos			
14	Handwheel	Steel			
17	Cap	Aluminium			
18	Gasket for cap	Nylon			
19	Locking nut	Steel			
20	Identification ring	Stainless steel			
21	Disk spring	Steel			

© Danfoss | DCS (mwa) | 2018.11

Material specification

SVA-S SS 80 - 125 (3 - 5 in.)

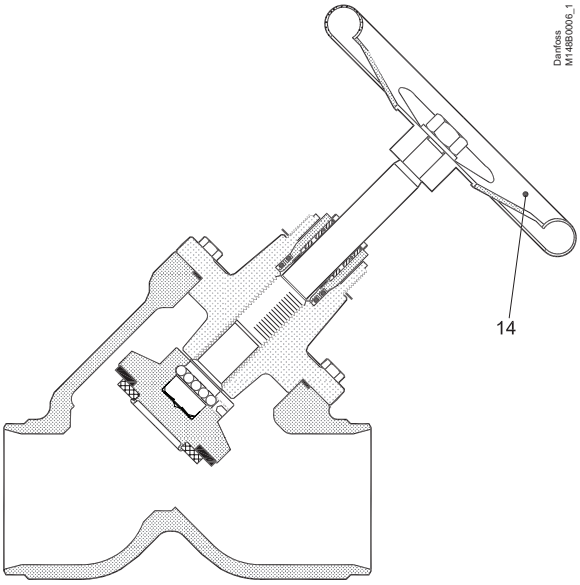

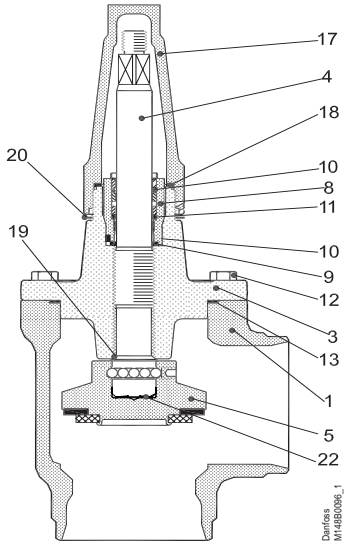

No.	Part	Material	EN	ISO	ASTM
1	Housing	Stainless steel	GX5CrNi19-10 EN10213-4		AISI 304
3	Valve bonnet	Stainless steel	GX5CrNiMo19-11-2 EN10213-4		AISI 304
4	Spindle	Stainless steel	X5CrNi18-10 DIN 17440	Type 17, 683/13	AISI 303
5	Cone Cone seal	Steel Teflon (PTFE)			
8	Packing gland	Stainless steel	X8CrNiS18-9 10088	Type 17 R 683/13	AISI 303
9	Packing washer	Aluminium			
10	O-ring	Cloroprene (Neoprene)			
11	Spring loaded Teflon ring	PTFE			
12	Bolts	Stainless steel	A2-70	A2-70	Type 308
13	Gasket	Fiber, Non-asbestos			
14	Hand wheel	Steel			
17	Cap	Aluminium			
18	Gasket for cap	Nylon (PA 6)			
19	Soft backseat	Teflon (PTFE)			
20	Identification ring	Stainless steel			
22	Disk spring	Steel			

Dimensions and weights

SVA S SS 15 - 40 (½ - 1½ in.) in angleway version with cap / hand wheel

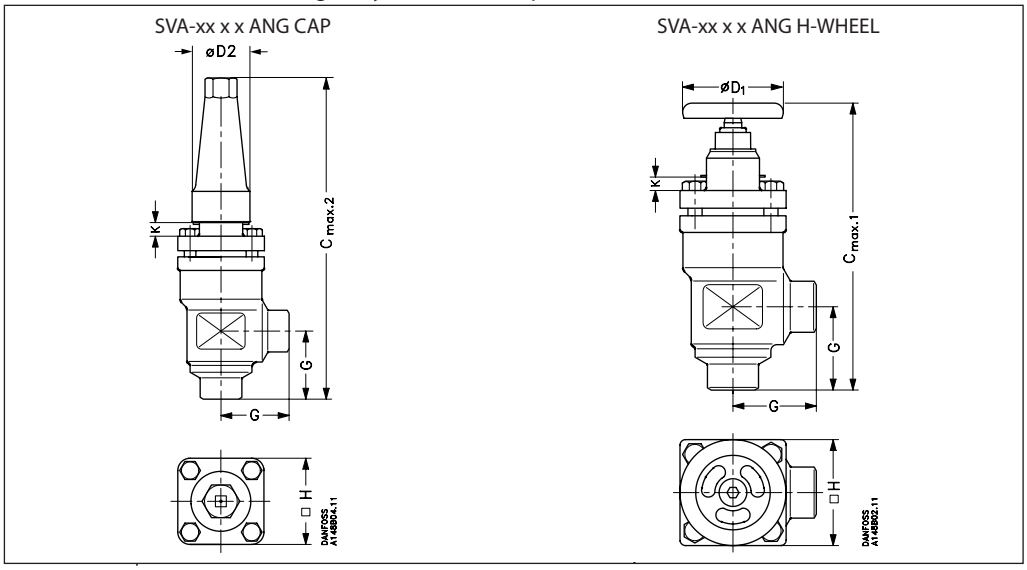

Valve size		K	$C_{max.1}$	$C_{max.2}$	G	$ØD_1$	$ØD_2$	□H	Weight
SVA-S SS									
SVA-S SS 15-20	mm	4	178	189	45	60	38	60	1.4 kg
SVA-S SS 1/2 - 3/4"	in.	0.16	7.00	7.44	1.77	2.36	1.5	2.36	3.1 lbs
SVA-S SS 25-40	mm	12	234	268	55	80	50	70	2.4 kg
SVA-S SS 1 - 1 1/2"	in.	0.47	9.21	10.55	2.17	3.15	1.97	2.76	5.3 lbs

Specified weights are approximate values only.

SVA-S/L SS 15 - 40 (½ - 1½ in.) straightway version with cap / hand wheel

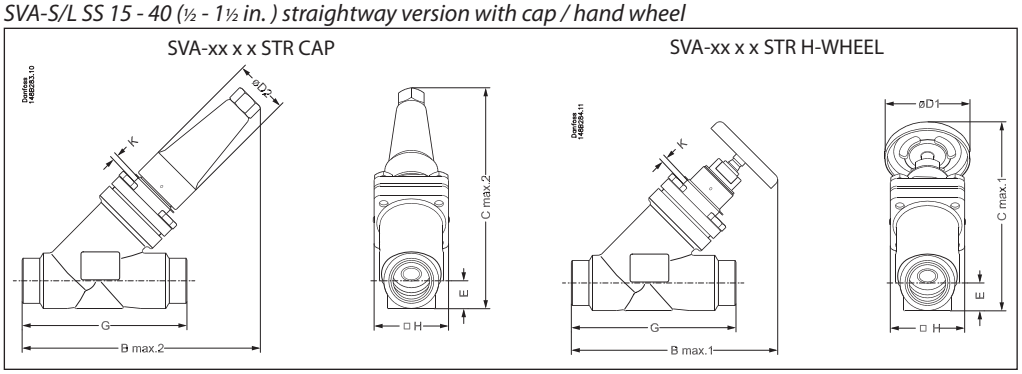

Valve size		K	$C_{max.1}$	$C_{max.2}$	$B_{max.1}$	$B_{max.2}$	E	G	$ØD_1$	$ØD_2$	□H	Weight
SVA-S SS												
SVA-S SS 15 - 20	mm	4	146	141	160	156	20	120	60	38	60	2.0 kg
SVA-S SS (½ - ¾)	in.	0.16	5.74	5.55	6.30	6.14	0.79	4.72	2.36	1.50	2.36	4.4 lb
SVA-S SS 25 - 40	mm	12	199	208	212	222	26	155	80	50	70	3.0 kg
SVA-S SS (1 - 1½)	in.	0.47	7.83	8.19	8.35	8.74	1.02	6.10	3.15	1.97	2.76	6.6 lb
SVA-L SS												
SVA-L SS 15 - 20	mm	63	188	184	202	198	20	120	60	38	60	2.0 kg
SVA-L SS (½ - ¾)	in.	2.48	7.40	7.24	7.95	7.80	0.79	4.72	2.36	1.50	2.36	4.4 lb
SVA-L SS 25 - 40	mm	74	243	252	256	265	26	155	80	50	70	3.0 kg
SVA-L SS (1 - 1½)	in.	2.91	9.57	9.92	10.08	10.43	1.02	6.10	3.15	1.97	2.76	6.6 lb

Specified weights are approximate values only.

© Danfoss | DCS (mwa) | 2018.11

Dimensions and weights

SVA-S SS 50 - 65 (2 - 2½ in.) in angleway version with cap / hand wheel

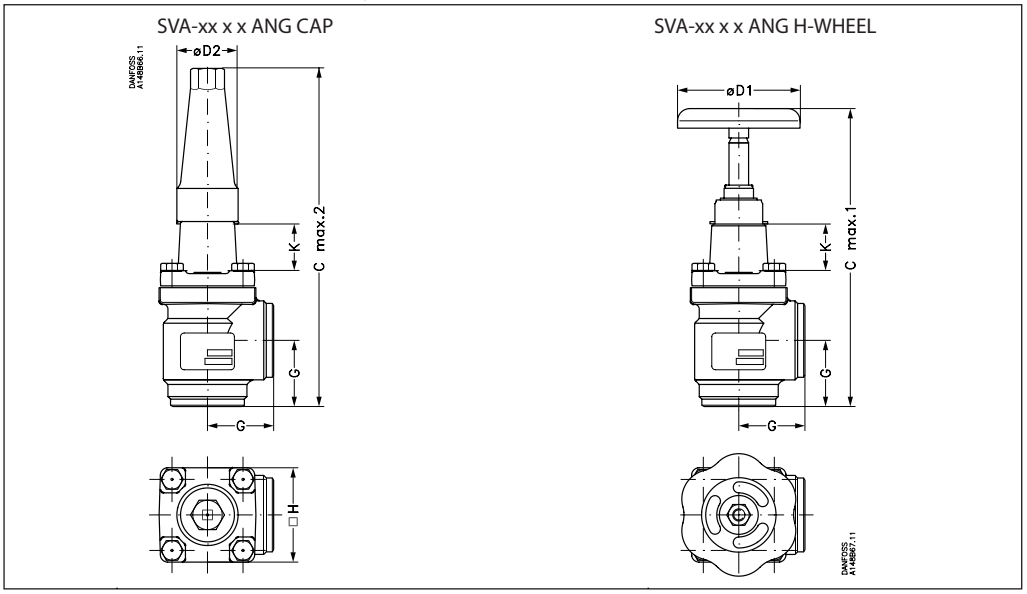

Valve size		K		$C_{max.1}$	$C_{max.2}$		G	∅D_1	∅D_2	□H		Weight
SVA-S SS												
SVA-S SS 50	mm	70		284	315		60	100	50	77		3.2 kg
SVA-S SS (2)	in.	2.76		11.18	12.40		2.36	3.94	1.97	3.03		7.1 lb
SVA-S SS 65	mm	70		310	335		70	100	50	90		4.8 kg
SVA-S SS (2½)	in.	2.76		12.20	13.19		2.76	3.94	1.97	3.54		10.6 lb

Specified weights are approximate values only.

SVA-S SS 50 - 65 (2 - 2½ in.) in straightway version with cap / hand wheel

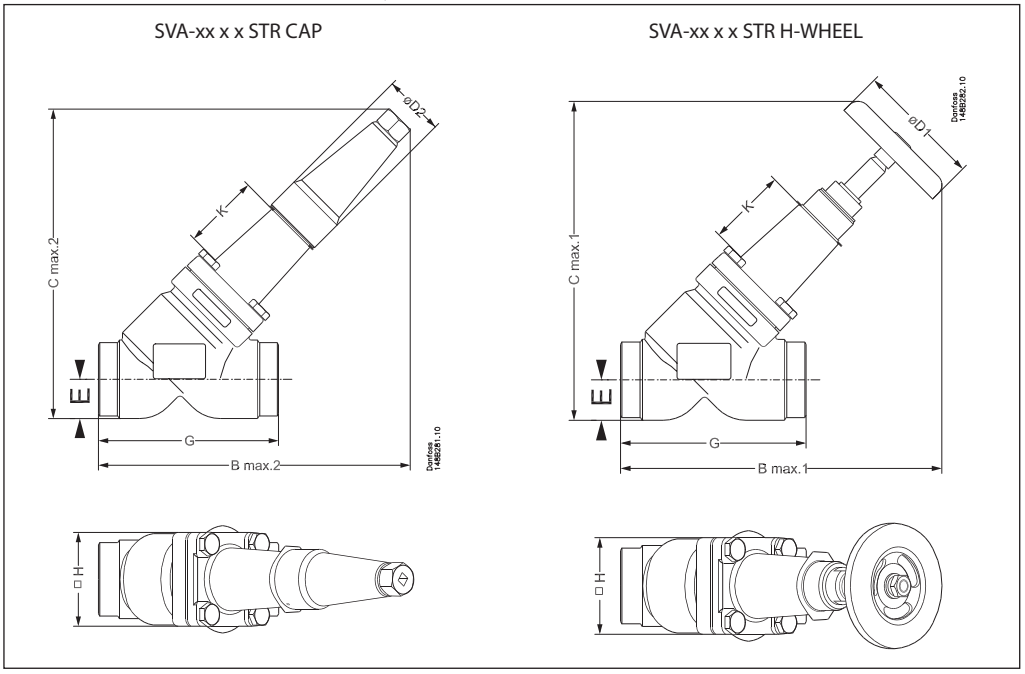

Valve size		K	$B_{max.1}$	$B_{max.2}$	$C_{max.1}$	$C_{max.2}$	E	G	∅D_1	∅D_2	□H	Weight
SVA-S SS												
SVA-S SS 50	mm	70	259	259	257	257	32	148	100	50	77	4.2 kg
SVA-S SS (2)	in.	2.76	10.20	10.20	10.12	10.12	1.26	5.83	3.94	1.97	3.03	9.3 lb
SVA-S SS 65	mm	70	284	280	284	280	40	176	100	50	90	6.3 kg
SVA-S SS (2½)	in.	2.76	11.18	11.02	11.18	11.02	1.57	6.93	3.94	1.97	3.54	13.9 lb

Specified weights are approximate values only.

Dimensions and weights

SVA-S SS 80 - 125 (3 - 5 in.) angleway version with cap / hand wheel

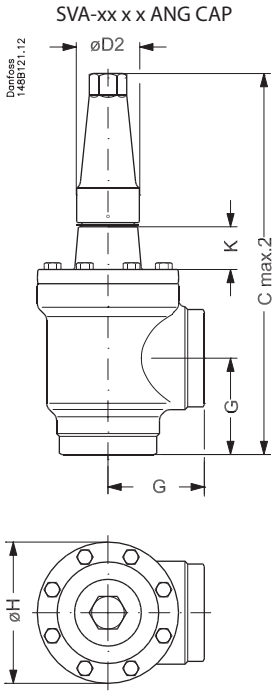

Valve size		K	$C_{max.2}$	G	$ØD_1$	$ØD_2$	ØH	Weight
SVA-S SS								
SVA-S SS 80	mm	76	388	90	200	58	129	9.7 kg
SVA-S SS (3)	in.	3.00	15.28	3.54	7.87	2.28	5.08	21.4 lb
SVA-S SS 100	mm	90	437	106	250	58	156	15.3 kg
SVA-S SS (4)	in.	3.54	17.20	4.17	9.84	2.28	6.14	33.7 lb
SVA-S SS 125	mm	90	533	128	315	74	193	28.1 kg
SVA-S SS (5)	in.	3.54	20.98	5.04	12.40	2.91	7.60	61.9 lb

Specified weights are approximate values only.

© Danfoss | DCS (mwa) | 2018.11

Ordering

Please note that the type codes only serve to identify the valves, some of which may not form part of the standard product range. For further information please contact your local Danfoss Sales Company.

Type codes

Valve type	**SVA-S/L SS**	Shut-off valve		
Nominal size in mm			Available connections	
			D	A
(valve size measured on the connection diameter)	**15**	DN 15 (½)	x	x
	20	DN 20 (¾)	x	x
	25	DN 25 (1)	x	x
	32	DN 32 (1¼)	x	x
	40	DN 40 (1½)	x	x
	50	DN 50 (2)	x	x
	65	DN 65 (2½)	x	x
	80	DN 80 (3)	x	x
	100	DN 100 (4)	x	x
	125	DN 125 (5)	x	
Connections	**D** **A**	Butt-weld connection: DIN EN 10220 Butt-weld connection: ANSI B 36.19M		
Valve housing	**ANG** **STR**	Angle flow Straight flow		
Other equipment	**H-WHEEL** **CAP**	Hand wheel Cap		

Important!
Where products need to be certified according to specific certification societies or where higher pressures are required, the relevant information should be included at the time of order.

Ordering SVA-S/L SS

Example:
SVA-S SS 20 DIN angleway with hand wheel = **148B5377**

Important!
Where products need to be certified according to specific certification societies or where higher pressures are required, the relevant information should be included at the time of order.

ANG = Angleway
STR = Straightway

CAP = Cap
H-WHEEL = Hand wheel

SVA-S SS Angleway

Size mm	Size in.	Type	MWP bar	MWP psi	Code number
Butt-weld DIN (EN 10220)					
15	½	SVA-S SS 15 D ANG H-WHEEL	52	754	**148B5289**
15	½	SVA-S SS 15 D ANG CAP	52	754	**148B5290**
20	¾	SVA-S SS 20 D ANG H-WHEEL	52	754	**148B5377**
20	¾	SVA-S SS 20 D ANG CAP	52	754	**148B5378**
25	1	SVA-S SS 25 D ANG H-WHEEL	52	754	**148B5486**
25	1	SVA-S SS 25 D ANG CAP	52	754	**148B5487**
32	1¼	SVA-S SS 32 D ANG H-WHEEL	52	754	**148B5566**
32	1¼	SVA-S SS 32 D ANG CAP	52	754	**148B5567**
40	1½	SVA-S SS 40 D ANG H-WHEEL	52	754	**148B5646**
40	1½	SVA-S SS 40 D ANG CAP	52	754	**148B5647**
50	2	SVA-S SS 50 D ANG H-WHEEL	52	754	**148B5753**
50	2	SVA-S SS 50 D ANG CAP	52	754	**148B5754**
65	2½	SVA-S SS 65 D ANG H-WHEEL	52	754	**148B5847**
65	2½	SVA-S SS 65 D ANG CAP	52	754	**148B5848**
80	3	SVA-S SS 80 D ANG CAP	50	725	**148B5928**
100	4	SVA-S SS 100 D ANG CAP	50	725	**148B6032**
125	5	SVA-S SS 125 D ANG CAP	50	725	**148B6126**

Size mm	Size in.	Type	MWP bar	MWP psi	Code number
Butt-weld ANSI (B 36.19M SCHEDULE 40)					
15	½	SVA-S SS 15 A40 ANG CAP	52	754	**148B5396**
20	¾	SVA-S SS 20 A40 ANG CAP	52	754	**148B5395**
25	1	SVA-S SS 25 A40 ANG CAP	52	754	**148B6477**
32	1¼	SVA-S SS 32 A40 ANG CAP	52	754	**148B5595**
40	1½	SVA-S SS 40 A40 ANG CAP	52	754	**148B5683**

Size mm	Size in.	Type	MWP bar	MWP psi	Code number
Butt-weld ANSI (B 36.19M SCHEDULE 10)					
50	2	SVA-S SS 50 D/A10 ANG CAP	52	754	**148B5754**
65	2½	SVA-S SS 65 A10 ANG CAP	52	754	**148B6448**
80	3	SVA-S SS 80 D/A10 ANG CAP	52	754	**148B5928**
100	4	SVA-S SS 100 A10 ANG CAP	52	754	**148B6035**

SVA-S SS Straightway

Size mm	Size in.	Type	MWP bar	MWP psi	Code number
Butt-weld DIN (EN 10220)					
15	½	SVA-S SS 15 D STR H-WHEEL	52	754	**148B5291**
15	½	SVA-S SS 15 D STR CAP	52	754	**148B5292**
20	¾	SVA-S SS 20 D STR H-WHEEL	52	754	**148B5379**
20	¾	SVA-S SS 20 D STR CAP	52	754	**148B5380**
25	1	SVA-S SS 25 D STR H-WHEEL	52	754	**148B5488**
25	1	SVA-S SS 25 D STR CAP	52	754	**148B5489**
32	1¼	SVA-S SS 32 D STR H-WHEEL	52	754	**148B5568**
32	1¼	SVA-S SS 32 D STR CAP	52	754	**148B5569**
40	1½	SVA-S SS 40 D STR H-WHEEL	52	754	**148B5648**
40	1½	SVA-S SS 40 D STR CAP	52	754	**148B5649**
50	2	SVA-S SS 50 D STR H-WHEEL	52	754	**148B5755**
50	2	SVA-S SS 50 D STR CAP	52	754	**148B5756**
65	2½	SVA-S SS 65 D STR H-WHEEL	52	754	**148B5849**
65	2½	SVA-S SS 65 D STR CAP	52	754	**148B5850**

Size mm	Size in.	Type	MWP bar	MWP psi	Code number
Butt-weld ANSI (B 36.19M SCHEDULE 40)					
15	½	SVA-S SS 15 A40 STR CAP	52	754	**148B5397**
20	¾	SVA-S SS 20 A40 STR CAP	52	754	**148B5398**
25	1	SVA-S SS 25 A40 STR CAP	52	754	**148B5399**
32	1¼	SVA-S SS 32 A40 STR CAP	52	754	**148B5596**
40	1½	SVA-S SS 40 A40 STR CAP	52	754	**148B5684**

Size mm	Size in.	Type	MWP bar	MWP psi	Code number
Butt-weld ANSI (B 36.19M SCHEDULE 10)					
50	2	SVA-S SS 50 D/A10 STR CAP	52	754	**148B5756**
65	2½	SVA-S SS 65 A10 STR CAP	52	754	**148B6449**

Ordering

ANG = Angleway
STR = Straightway

CAP = Cap
H-WHEEL = Hand wheel

SVA-L SS Angleway

Size		Type	MWP		Code number
mm	in.		bar	psi	
Butt-weld DIN (EN 10220)					
15	½	SVA-L SS 15 D ANG H-WHEEL	52	754	**148B6546**
15	½	SVA-L SS 15 D ANG CAP	52	754	**148B6547**
20	¾	SVA-L SS 20 D ANG H-WHEEL	52	754	**148B6550**
20	¾	SVA-L SS 20 D ANG CAP	52	754	**148B6551**
25	1	SVA-L SS 25 D ANG H-WHEEL	52	754	**148B6554**
25	1	SVA-L SS 25 D ANG CAP	52	754	**148B6555**
32	1¼	SVA-L SS 32 D ANG H-WHEEL	52	754	**148B6558**
32	1¼	SVA-L SS 32 D ANG CAP	52	754	**148B6559**
40	1½	SVA-L SS 40 D ANG H-WHEEL	52	754	**148B6562**
40	1½	SVA-L SS 40 D ANG CAP	52	754	**148B6563**

SVA-L SS Straightway

Size		Type	MWP		Code number
mm	in.		bar	psi	
Butt-weld DIN (EN 10220)					
15	½	SVA-L SS 15 D STR H-WHEEL	52	754	**148B6548**
15	½	SVA-L SS 15 D STR CAP	52	754	**148B6549**
20	¾	SVA-L SS 20 D STR H-WHEEL	52	754	**148B6552**
20	¾	SVA-L SS 20 D STR CAP	52	754	**148B6553**
25	1	SVA-L SS 25 D STR H-WHEEL	52	754	**148B6556**
25	1	SVA-L SS 25 D STR CAP	52	754	**148B6557**
32	1¼	SVA-L SS 32 D STR H-WHEEL	52	754	**148B6560**
32	1¼	SVA-L SS 32 D STR CAP	52	754	**148B6561**
40	1½	SVA-L SS 40 D STR H-WHEEL	52	754	**148B6564**
40	1½	SVA-L SS 40 D STR CAP	52	754	**148B6565**

© Danfoss | DCS (mwa) | 2018.11

ENGINEERING
TOMORROW

Shut-off valves
Types SVA-DL and SVA-DH 250-300

Contents **Page**

Features 57
Design 58
Technical data 59
Function 60
Material specification 61
Connections 63
Dimensions and weights 63
Ordering 64

AI177086432445en-000701 | 2015.11

ENGINEERING
TOMORROW

Shut-off valves
Types SVA-DL and SVA-DH 250-300

SVA-DL and SVA-DH are angleway shut-off valves designed to meet all industrial refrigeration application requirements.

SVA-DL (**D**elta pressure **L**ow)
is designed with a restriction in the opening function. High differential pressure can be applied from the side port and reduced pressure can be applied from bottom port. SVA-DL is a two-step valve for pressure relief.

SVA-DH (**D**elta pressure **H**igh)
is designed without restriction in the opening function. As a result of its balanced design this valve is able to open at all differential pressures with limited torque.
The angleway shut-off valves are carefully designed to give favourable flow conditions. Easy to dismantle for inspection and repair.

Both SVA-DL & DH shut-off valves have internal backseating enabling the spindle seal to be replaced with the valve still under pressure.

The valves are designed to give favourable flow characteristics and are easy to dismantle for servicing. The valve cone is designed to ensure perfect closing.

Features

- Applicable to HC, HCFC, HFC, R717 (Ammonia) and R744 (CO_2)
- Optional accessories:
  - Heavy duty industrial handwheel for frequent operation
  - Vented cap for infrequent operation
- Available in angleway version with extended bonnet for insulated systems
- The valve caps can be wire-sealed, to prevent operation by unauthorised persons
- Internal PTFE backseating
- The bonnet is suitable for installation in insulated low temperature applications
- The housing and bonnet are made from low temperature steel in accordance with the requirements of the Pressure Equipment Directive and other international classification authorities
- Classification: DNV, CRN, BV, EAC etc.
  To get an updated list of certification on the products please contact your local Danfoss Sales Company

Design

Connections
Available with the following connections:
Butt-weld DIN 2448
Butt-weld ANSI B 36.10
- DN250: Schedule 40
- DN300: STD

Housing and bonnet
Made from special, cold-resistant steel approved for low temperature operations.

Bolts
Stainless steel, Quality A2-70

Valve cone assembly
The valve cone assembly can be turned on the spindle, thus there is no friction between cone and seat when the valve is opened and closed. A Teflon tightening ring provides perfect sealing at a minimum closing torque.

Spindle
Made of polished stainless steel, ideal for O-ring sealing.

Packing gland
The packing gland comprises a spring loaded seal packing which ensures perfect tightness in the range: -60 – 150 °C / -76 – 302 °F. Furthermore, the packing glands incorporate a scraper ring to prevent the penetration of dirt and ice.

Marking
Each valve type is clearly marked with type, size and performance range.

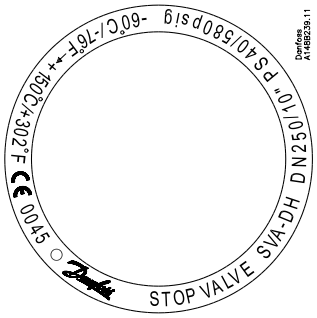

Example of marking ring, SVA-DH

Pressure Equipment Directive (PED)
SVA-DL and DH valves are approved and CE marked in accordance with the Pressure Equipment Directive - 97/23/EC.

For further details / restrictions - see Installation Instruction.

SVA-DL & DH valves		
Nominal bore	DN 250 mm (10 in)	DN 300 mm (12 in)
Classified for	Fluid group I	
Category	III	IV

© Danfoss | DCS (mwa) | 2018.11

Technical data

Refrigerants
Applicable to HC, HCFC, HFC, R717 (Ammonia) and R744 (CO_2)
For further information please see installation instruction for SVA-DL and SVA-DH.

Temperature range
SVA-DL and SVA-DH
-60 – 150 °C / -76 – 302 °F

Pressure range
SVA-DL and SVA-DH
40 bar g / 580 psi g at -60 – 60 °C / -76 °F – 140 °F
36 bar g / 522 psi g at 60 – 80 °C / 140 – 176 °F
32 bar g / 464 psi g at 80 – 120 °C / 176 – 248 °F
28 bar g / 406 psi g at 120 – 150 °C / 248 – 302 °F

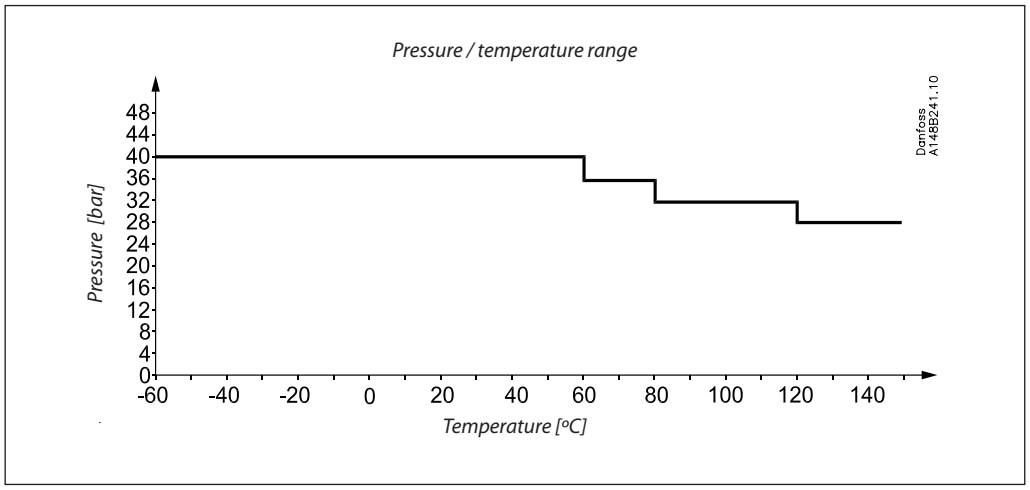

Function

SVA-DL
The SVA-DL shut-off valve is designed with a restriction in the flow direction (differential pressure). To ensure the most favourable valve performance the flow must be directed from the side port towards the valve cone. Operation of the valve with flow in this direction is made possible by the two-step opening valve cone as illustrated below.
The sketches below give the maximum pressures at which the the valve can be operated manually and tightness can be achieved.

SVA-DH
The SVA-DH shut-off valve is designed without restrictions in either flow direction or differential pressure. Due to the balanced valve cone design the torque required to operate the valve is minimized and the valve can be opened and closed against high pressure with flow in any direction.

Pressure

SVA-DL

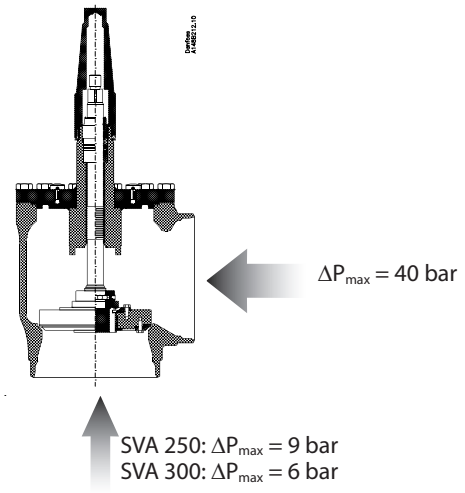

SVA-DH

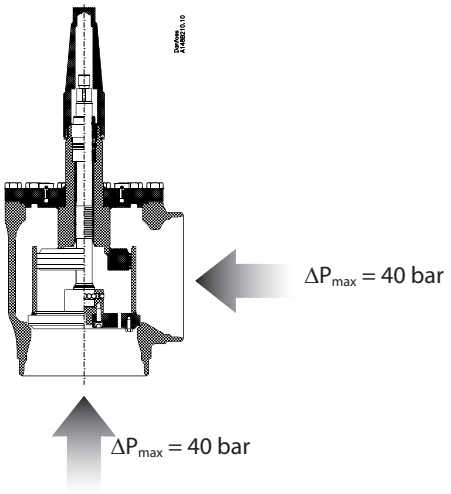

Flow

SVA-DL

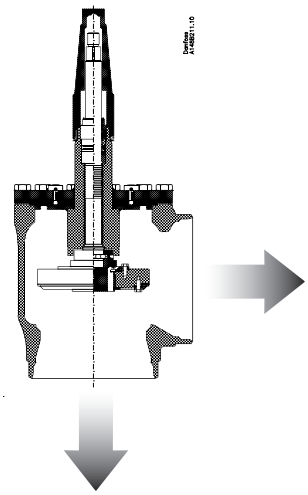

SVA-DH

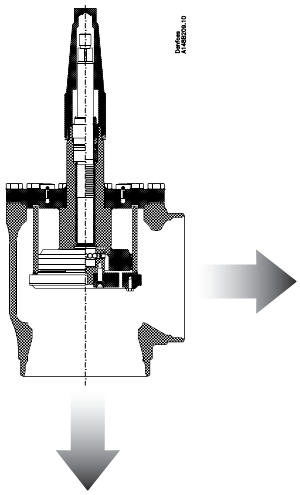

© Danfoss | DCS (mwa) | 2018.11

Material specification

SVA-DL 250 - 300

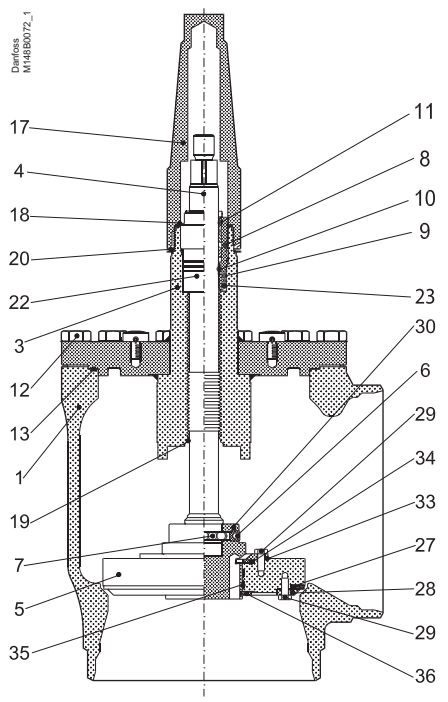

No.	Part	Material	EN	ASTM
1	Housing	Steel	G20Mn5 QT, EN 10213-3	LCC, A352
3	Bonnet	Steel	P275NL1, EN 10028-3 G20Mn5QT EN 10213-3	Grade A, A662 LCC, A352
4	Spindle	Steel	X5CrNi18-10, EN10088	AISI 304
5	Cone	Steel	P275NL1, EN 10028-3	Grade A, A662
6	Set screw	Steel	Quality 8.8	Grade 5
7	Balls	Stainless steel		
8	Packing Gland	Stainless steel	X8CrNiS18-9 10088	AISI 303
9	O-ring	Cloroprene (Neoprene)		
10	Spring loaded Teflon ring	PTFE		
11	O-ring	Cloroprene (Neoprene)		
12	Bolts	Stainless steel	A2-70	Type 308
13	Gasket	Fiber, Non-asbestos		
14	Handwheel	Steel		
15	Washer	Stainless steel		
16	Lock nut	Stainless steel+nylon		
17	Cap	Aluminium	AlMgSi1	
18	Gasket for cap	Nylon (PA 6)		
19	Soft backseat	Teflon (PTFE)		
20	Identification ring	Stainless steel		
22	Guide for spindle	Steel	11SMn30	Grade1213, A29
23	O-ring	PTFE/FKM		
27	Gasket	Teflon (PTFE)		
28	Front for valve cone	Steel	S235JRG2, EN10025	Grade C, A283
29	Bolts	Steel	Quality 8.8	Grade 5
30	Insert, valve cone	Spheroidal graphite cast iron	EN-GJS-250	Class 40B
31	Lifting eye bolts	Steel		
33	Backing for valve cone	Steel	S235JRG2, EN10025	Grade C, A283
34	Gasket	Teflon (PTFE)		
35	Wear ring	Teflon (PTFE)		
36	Retaining ring	Spring steel		

Material specification

SVA-DH 250 - 300

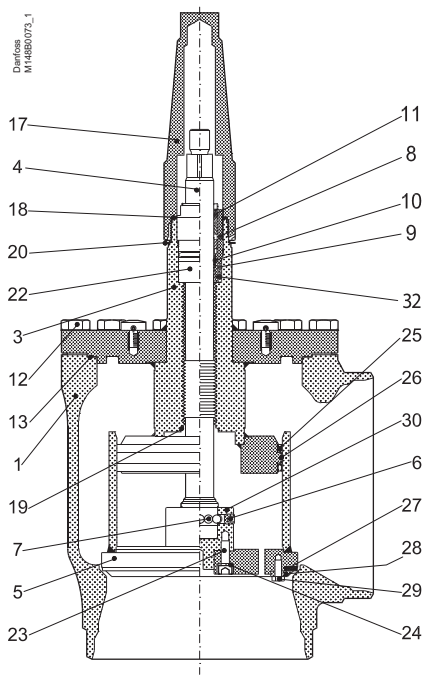

No.	Part	Material	EN	ASTM
1	Housing	Steel	G20Mn5 QT, EN 10213-3	LCC, A352
3	Bonnet	Steel	P275NL1, EN 10028-3 G20Mn5 QT, EN 10213-3	Grade A, A662 LCC, A352
4	Spindle	Steel	X5CrNi18-10 DIN 17440	
5	Cone	Steel	P275NL1, EN 10028-3	Grade A, A662
6	Set screw	Steel	Quality 8.8	Grade 5
7	Balls	Stainless steel		
8	Packing Gland	Stainless steel	X8CrNiS18-9 10088	AISI 303
9	O-ring	Cloroprene (Neoprene)		
10	Spring loaded Teflon ring	PTFE		
11	O-ring	Cloroprene (Neoprene)		
12	Bolts	Stainless steel	A2-70	Type 308
13	Gasket	Fiber, Non-asbestos		
14	Handwheel	Steel		
15	Washer	Stainless steel		
16	Lock nut	Stainless steel+nylon		
17	Cap	Aluminium	AlMgSi1	
18	Gasket for cap	Nylon (PA 6)		
19	Soft backseat	Teflon (PTFE)		
20	Identification ring	Stainless steel		
22	Guide for spindle	Steel	11SMn30	Grade 1213, A29
23	Bolts	Steel	Quality 8.8	Grade 5
24	Washer	Steel		
25	U-sleeve sealing	Teflon (PTFE) +Stainless steel		
26	Wear ring	Teflon (PTFE)		
27	Gasket	Teflon (PTFE)		
28	Front for valve cone	Steel	S235JRG2, EN10025	Grade C, A283
29	Bolts	Steel	Quality 8.8	Grade 5
30	Insert, valve cone	Spheroidal graphite cast iron	EN-GJS-250	Class 40B
31	Lifting eye bolts	Steel		
32	O-ring	PTFE/FKM		

© Danfoss | DCS (mwa) | 2018.11

Connections

DIN

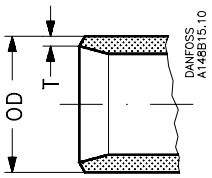

Size [mm]	Size [in]	OD [mm]	T [mm]	OD [in]	T [in]
Welding DIN (2448)					
250	10	273	6.3	10.75	0.25
300	12	323.9	7.1	12.75	0.28

Type	K_v [m³/h]	C_v [USgal/min]
SVA-DH	1405	1630
SVA-DL	1610	1868
SVA-DH	1870	2169
SVA-DL	2082	2415

ANSI

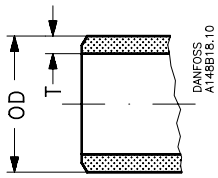

Size [mm]	Size [in]	OD [mm]	T [mm]	OD [in]	T [in]
Welding ANSI (B 36.10)					
250	10	273	9.3	10.75	0.25
300	12	323.9	9.5	12.75	0.28

Type	K_v [m³/h]	C_v [USgal/min]
SVA-DH	1405	1630
SVA-DL	1610	1868
SVA-DH	1870	2169
SVA-DL	2082	2415

Dimensions and weights

SVA-DH, SVA-DL 250 -300, angleway version

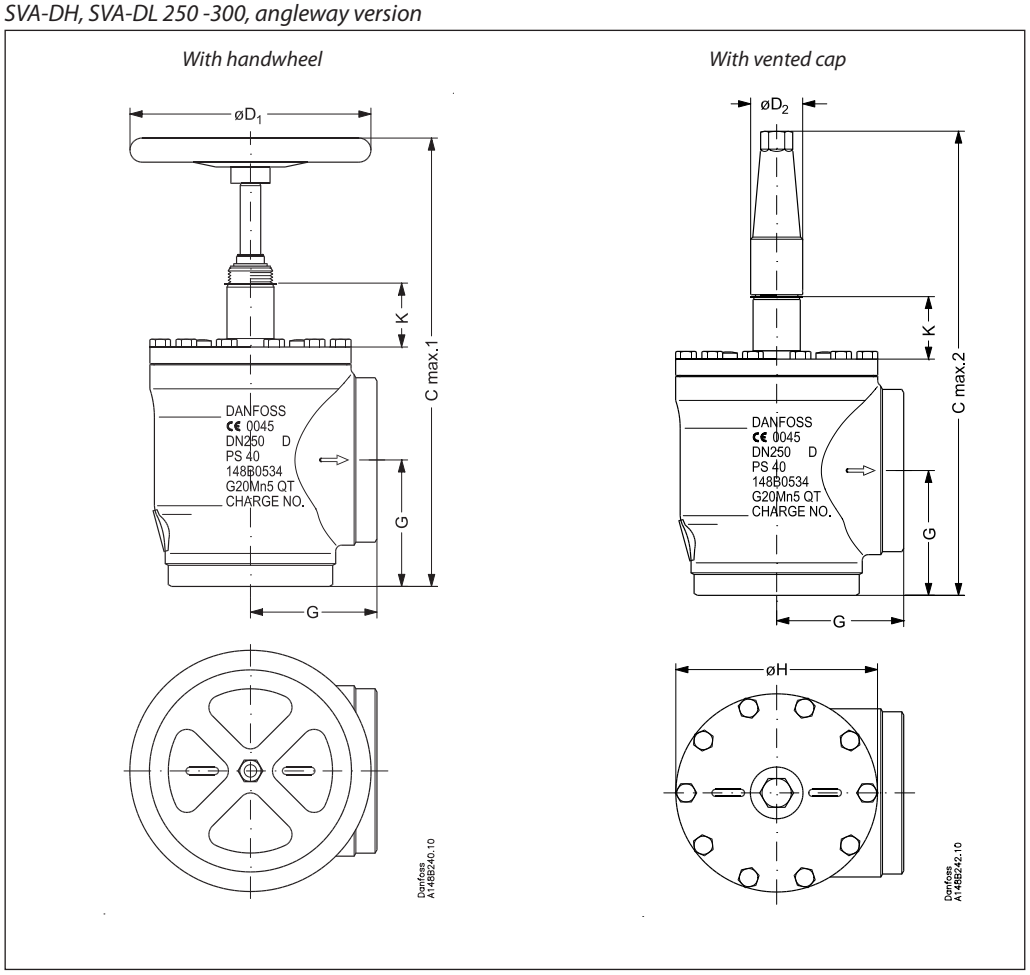

Valve size		K	Cmax. 1	Cmax. 2	G	$øD_1$	$øD_2$	øH	Weight
SVA-DL / SVA-DH									
SVA 250	[mm]	102	745	782	210	400	86	334	130 kg
SVA (10)	[in]	4	29.33	30.79	8.27	15.75	3.39	13.14	287 lb
SVA 300	[mm]	102	852	842	240	500	86	384	190 kg
SVA (12)	[in]	4	33.54	33.14	9.45	19.69	3.39	15.12	419 lb

Specified weights are approximate values only

Ordering

The table below can be used to identify the valve required.

Please note that the type codes only serve to identify the valves, some of which may not form part of the standard product range.

For further information please contact your local Danfoss Sales Company.

Type codes

Valve type Nominal size in mm	SVA-DL SVA-DH	Shut-off valve Shut-off valve	(Δp Low) (Δp High)	
			Available connections	
			D	A
(Valve size measured on the connection diameter)	250	DN250	X	X
	300	DN300	X	X
Connections	D	Butt weld connection: DIN 2448		
	A	Butt weld connections: ANSI B 36.10 DN250: Schedule 40 DN300: STD		
Other euipment	CAP	Aluminum cap		
	H-WHEEL	Steel handweel		

Important!
Where products need to be certified according to specific certification societies or where higher pressures are required, the relevant information should be included at the time of ordering.

Code numbers

Size [mm]	Size [in]	Type	Code number
250	10	SVA-DL 250 D CAP	**148B3760**
250	10	SVA-DL 250 D H-HEEL	**148B3761**
250	10	SVA-DL 250 A CAP	**148B3762**
250	10	SVA-DL 250 A H-WHEEL	**148B3763**
250	10	SVA-DH 250 D CAP	**148B3764**
250	10	SVA-DH 250 D H-WHEEL	**148B3765**
250	10	SVA-DH 250 A CAP	**148B3766**
250	10	SVA-DH 250 A H-WHEEL	**148B3767**
300	12	SVA-DL 300 D CAP	**148B3770**
300	12	SVA-DL 300 D H-WHEEL	**148B3771**
300	12	SVA-DL 300 A CAP	**148B3772**
300	12	SVA-DL 300 A H-WHEEL	**148B3773**
300	12	SVA-DH 300 D CAP	**148B3774**
300	12	SVA-DH 300 D H-WHEEL	**148B3775**
300	12	SVA-DH 300 A CAP	**148B3776**
300	12	SVA-DH 300 A H-WHEEL	**148B3777**

A = ANSI butt-weld
D = DIN butt-weld

H-WHEEL: Handwheel
CAP: Vented cap

© Danfoss | DCS (mwa) | 2018.11

ENGINEERING
TOMORROW

Hand operated regulating valves

Types REG-SA and REG-SB, 52 bar (754 psi)

Contents **Page**

Features 67
Design 68
Technical data 68
Computation and selection 69
Material specification 78
Connections 79
Dimensions and weights 80
Ordering 82

AI189386433903en-001002 | 2018.11

ENGINEERING
TOMORROW

Hand operated regulating valves

Types REG-SA and REG-SB, 52 bar (754 psi)

REG-SA and REG-SB are angleway and straightway hand operated regulating valves, which act as normal shut-off valves in closed position.

The valves are available in two different versions – REG-SA and REG-SB designed for regulation purposes in liquid and expansion lines.

The valves are designed to meet the strict quality requirements on refrigerating installations specified by the international classification societies and are carefully designed to present favourable flow conditions and accurate linear characteristics.

REG-SA and REG-SB are equipped with vented cap and internal backseating enables replacement of the spindle seal whilst the valve is active, i.e. under pressure.

Features

- Applicable to HCFC, HFC, R717 (Ammonia), R744 (CO_2), Propane, Butane, Iso-Butane and Ethane.
  R717 Heat Pump and Propylene applications with replaced O-ring.
- Modular Concept:
  - Each valve housing is available with several different connection types and sizes.
  - Possible to convert REG-SA or REG-SB to any other product in the Flexline™ SVL family (shut-off valve, check & stop valve, check valve or strainer) just by replacing the complete top part.
- Fast and easy valve overhaul service. It is easy to replace the top part and no welding is needed.
- Designed to ensure perfect regulation
- Internal backseating enables replacement of the spindle seal whilst the valve is active, i.e. under pressure.
- Easy to disassemble for inspection and possible repair.
- Long neck versions (DN 15 to DN 40) for insulated systems available from parts programme.
- Max. operating pressure:
  52 bar g (754 psi g)
- Temperature range:
  –60/+150°C (–76/+302°F)
- Acts as a normal shut-off valve in closed position.
- Housing and bonnet material is low temperature steel according to requirements of the Pressure Equipment Directive and other international classification authorities.
- Exact capacity and setting of the valve can be calculated for all refrigerants by means of Coolselector®2 (Danfoss calculation and selection software).
- Classification: DNV, CRN, BV, EAC etc.
  To get an updated list of certification on the products please contact your local Danfoss Sales Company.

Design

Housing
Housing is Standard SVA angleway or straightway housing allowing other inserts from the SVL platform to be installed.
Material is special, cold resistant steel

Connections
Available with the following connections:

- Butt-weld DIN (EN 10220)
  – DN 10 - 65 ($^3/_8$ - 2 ½ in)
- Butt-weld ANSI (B 36.10 Schedule 80)
  – DN 10 - 40 ($^3/_8$ - 1 ½ in)
- Butt-weld ANSI (B 36.10 Schedule 40)
  – DN 50 - 65 (2 - 2 ½ in)
- Butt-weld GOST, (8734-75 and 8732-78)
  – DN 10 - 65 (^{3} $_8$ - 2 ½ in)
- Socket weld (ANSI B 16.11)
  – DN 15 - 40 (½ - 1 ½ in)
- FPT inside pipe thread, NPT (ANSI/ASME B 1.20.1)
  – DN 15 - 32 (½ - 1 ¼ in)

The cone
The valves are available in two different versions – REG-SA with an A cone and REG-SB with a B cone. The A cone is designed for expansion lines, while the B cone is designed for regulating purposes e.g. liquid lines.

The valve cone is designed to ensure perfect regulation and provide an extensive regulating area. Irrespective of the refrigerant used, it is easy to obtain the correct capacity. A cone seal ring provides perfect sealing at a minimum closing momentum.

The valve cone can be turned on the spindle, thus there will be no friction between the cone and the seat when the valve is opened and closed.
Spindle
The spindle is made of polished stainless steel, which is ideal for O-ring sealing.

Packing gland - REG-SA and REG-SB
The "full temperature range" packing gland ensures perfect tightness in the whole range: -60 – 150 °C / -76 – 302 °F. The packing glands are equipped with a scraper ring to prevent penetration of dirt and ice.

Installation
Install the valve with the spindle up or in horizontal position. The flow must be directed towards the cone.

The valve is designed to withstand high internal pressure. However, the piping system in general should be designed to avoid liquid traps and reduce the risk of hydraulic pressure caused by thermal expansion.

For further information refer to product instruction for REG-SA and REG-SB.

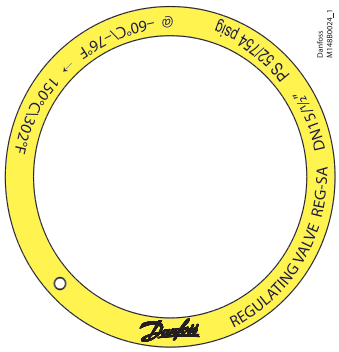

Example of marking ring, REG-SA

Pressure Equipment Directive (PED)
REG valves are approved according to the European standard specified in the Pressure Equipment Directive and are CE marked.

REG-SA and REG-SB valves			
Nominal bore	DN = < 25 mm (1 in)	DN32-80 mm (1 ¼ - 3 in)	DN100 - 125 mm (4 - 5 in)
Classified for	Fluid group I		
Category	Article 3, paragraph 3	II	III

Technical data

- *Refrigerants*
  Applicable to HCFC, HFC, R717 (Ammonia), R744 (CO_2), Propane, Butane, Iso-Butane and Ethane.
  R717 Heat Pump and Propylene applications with replaced O-ring.
- *Temperature range*
  –60/+150°C (–76/+302°F)
- *Max working pressure*
  52 bar g (754 psi g)
- *Flow coefficients*
  Flow coefficients for fully opened valves from k_v = 0.15 to 80 m^3/h (C_v = 0.17 to 92.5 USgal/min).

© Danfoss | DCS (mwa) | 2018.11

Computation and selection

Introduction
In refrigeration plants, hand operated regulating valves are primarily used in liquid lines in order to regulate the flow of refrigerant. The valves can, however, also be used as expansion valves. From a calculation point of view the two fields of application are very different.

Normal flow is the term used to describe the general case where the flow through the valve is proportional to the square root of the pressure drop across it and inversely proportional to the density of the refrigerant (Bernouillis equation).

This relationship between mass flow, pressure drop and density satisfies the majority of all valve applications with refrigerants and brines.

Normal flow is characterised by turbulent flow through the valve without any phase change. The following capacity curves are based on the above mentioned assumption.

Application of the hand operated regulating valves outside the normal flow area will reduce the capacity of the valve considerably. In such cases it is recommended to use Coolselector®2 (Danfoss calculation and selection software).

Location of valve in system (marked with grey)

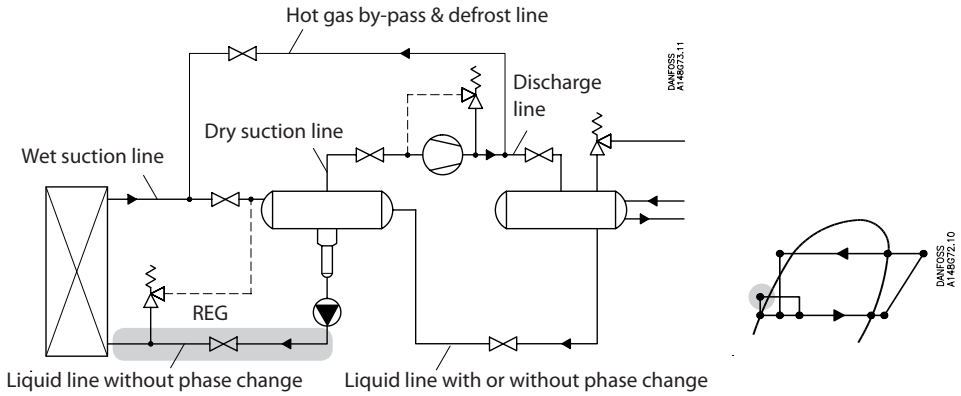

Sizing hand operated regulating valve for liquid flow
Liquid refrigerants: Use the liquid tables, fig. 6 - 10. For other refrigerants and brines, "Normal flow" (Turbulent flow); see below and use the flow coefficient tables (fig. 1 - 5).

SI-units

Mass flow:

$$k_v = \frac{G}{\sqrt{\rho \times 1000 \times \Delta p}} = G \times C_A \, [m^3/h]$$

Volume flow:

$$k_v = \frac{\dot{V}}{\sqrt{\frac{1000 \times \Delta p}{\rho}}} \, [m^3/h]$$

Imperial units

Mass flow:

$$C_v = \frac{0.95 \times G}{\sqrt{\rho \times \Delta p}} = 31.6 \times G \times C_A \, [USgal/min.]$$

Volume flow:

$$C_v = \frac{0.127 \times \dot{V}}{\sqrt{\frac{\Delta p}{\rho}}} \, [USgal/min.]$$

k_v	[m³/h]	Quantity [m³/h] of water flowing through a valve at a pressure loss of 1 bar (according to VDE/VDI Norm 2173).
P_1	[bar]	Pressure before the valve (upstream).
P_2	[bar]	Pressure after the valve (downstream).
Δp	[bar]	Actual pressure loss across the valve (P_1–P_2).
G	[kg/h]	Mass flow through the valve.
$\dot{V}$	[m³/h]	Volume flow through the valve.
ρ	[kg/m³]	Density of the refrigerant before the valve.
C_A		Calculation factor (fig. 11).

C_v	[US gal/min]	Quantity [US gal/min] of water flowing through a valve at a pressure loss of 1 psi.
P_1	[psi]	Pressure before the valve (upstream).
P_2	[psi]	Pressure after the valve (downstream).
Δp	[psi]	Actual pressure loss across the valve (P_1–P_2).
G	[lb/min]	Mass flow through the valve.
$\dot{V}$	[US gal/min]	Volume flow through the valve.
ρ	[lb/ft³]	Density of the refrigerant before the valve
C_A		Calculation factor (fig. 11).

Computation and selection

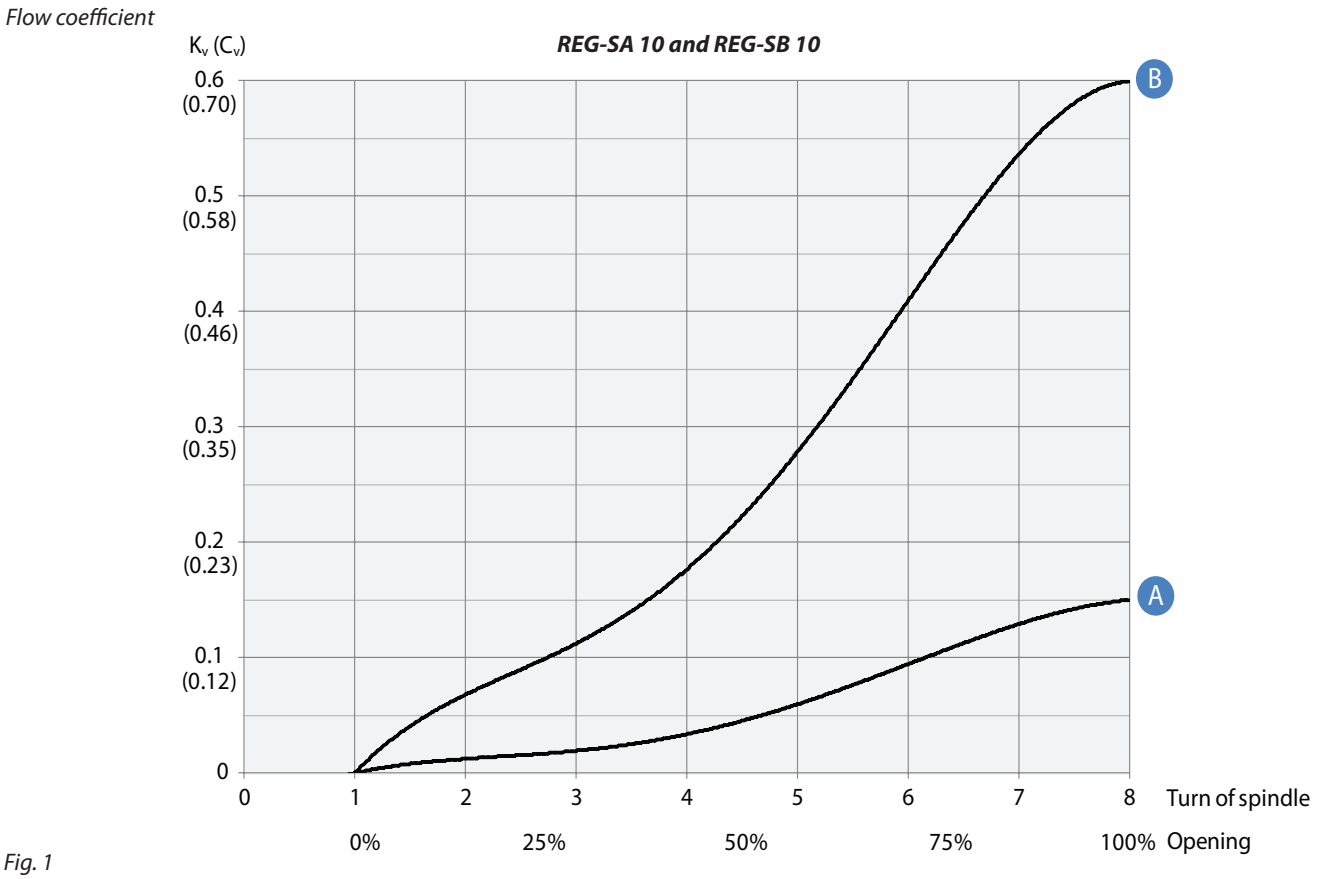

Fig. 1

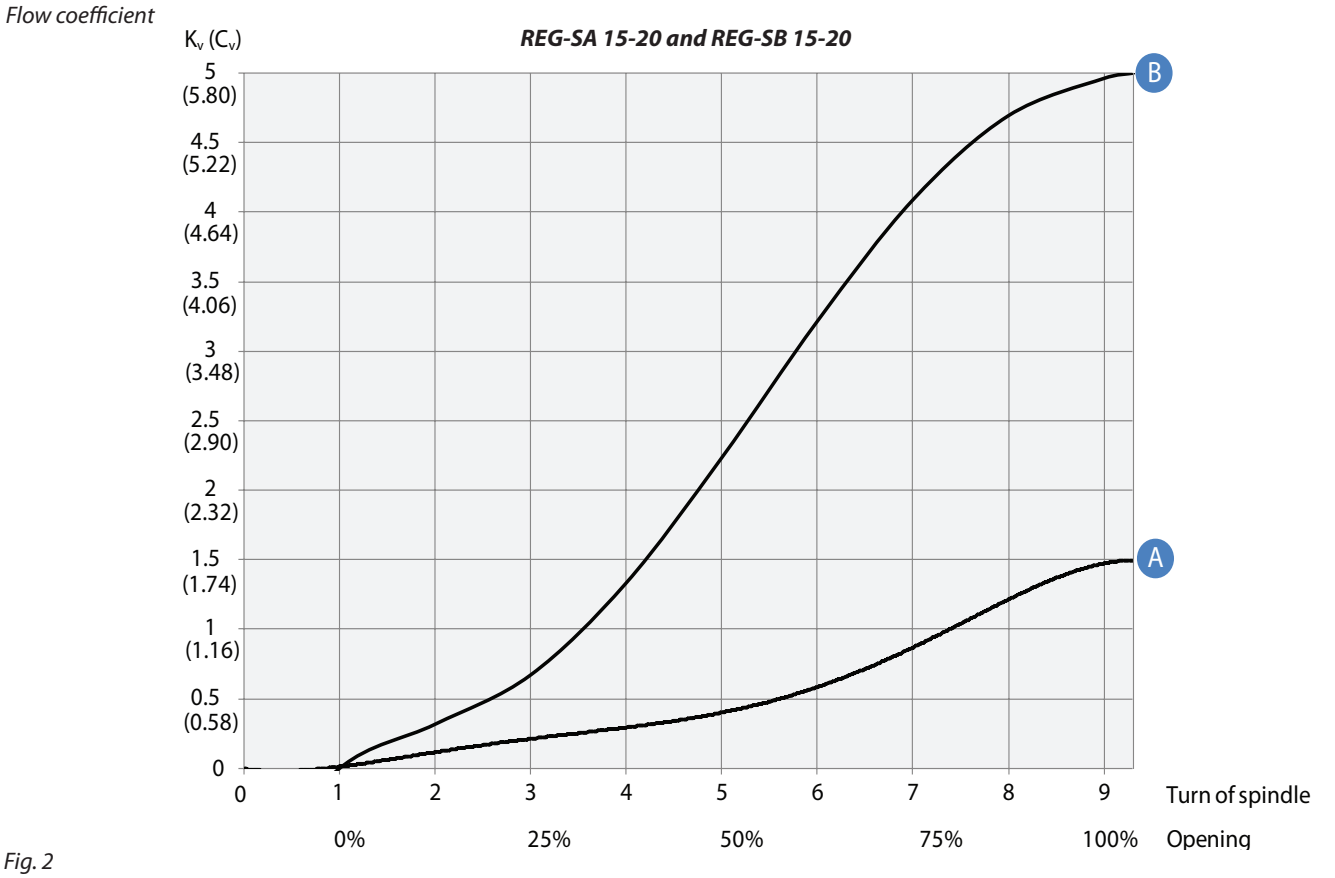

Fig. 2

© Danfoss | DCS (mwa) | 2018.11

Computation and selection *(Continued)*

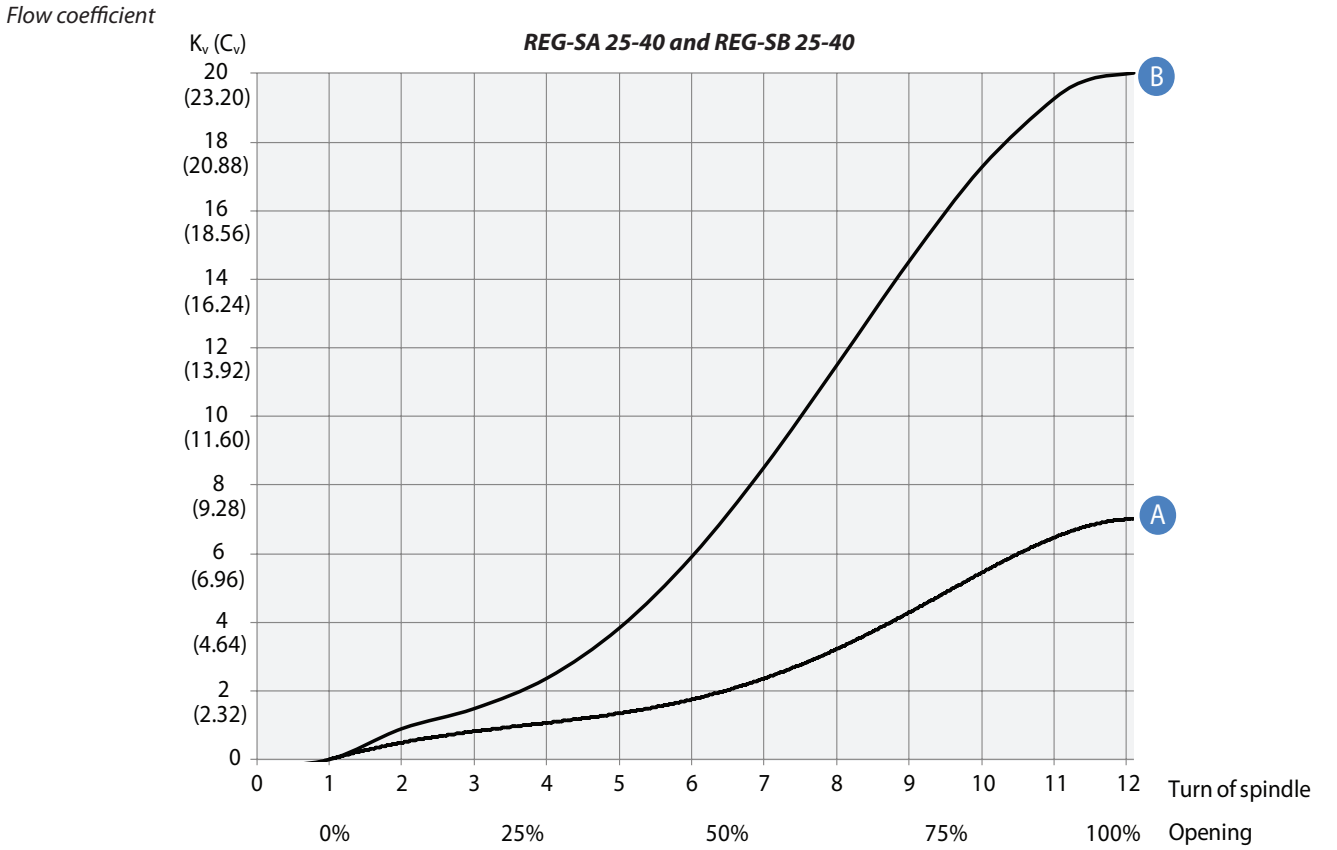

Fig. 3

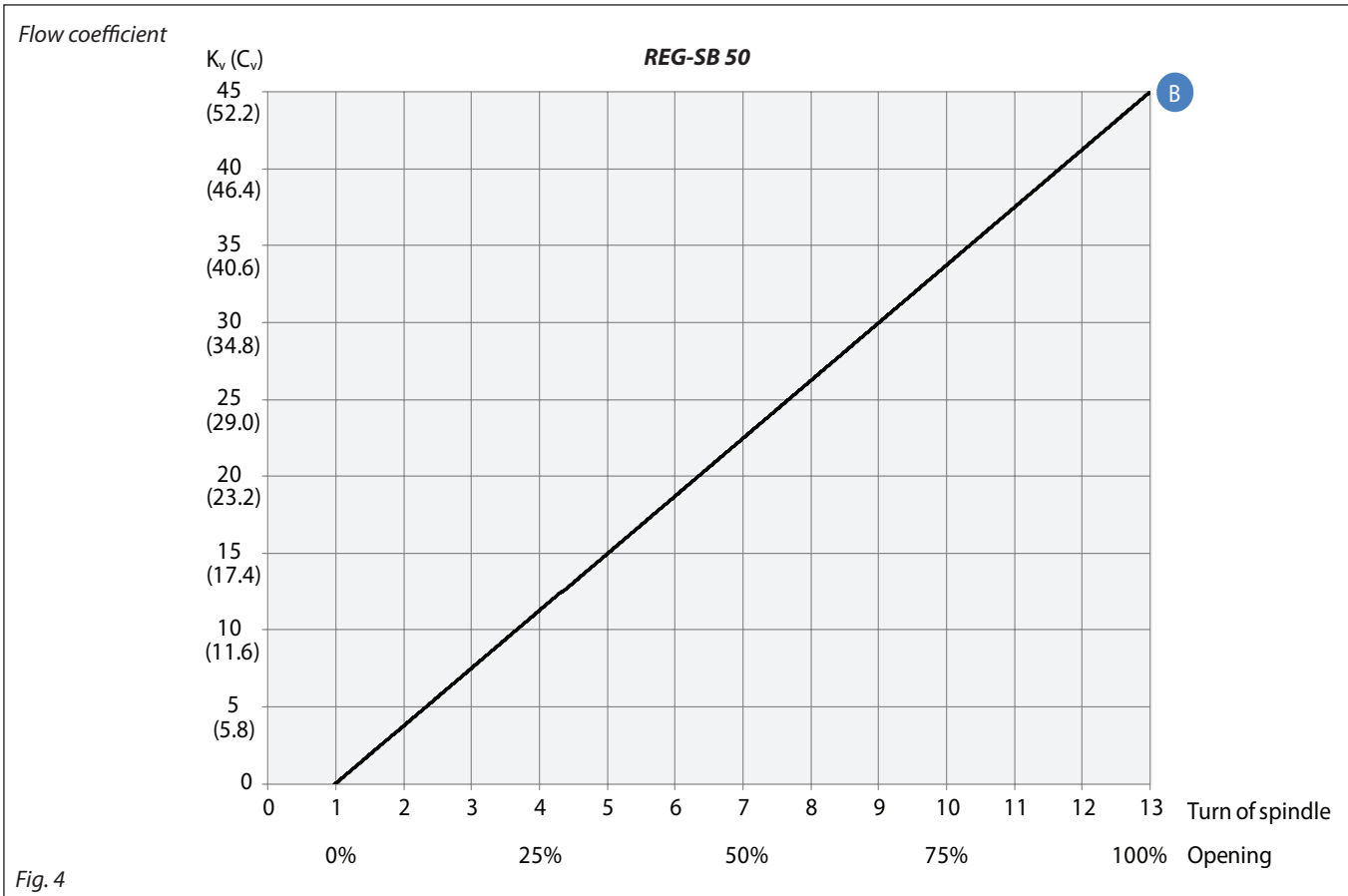

Fig. 4

Computation and selection *(Continued)*

Flow coefficient

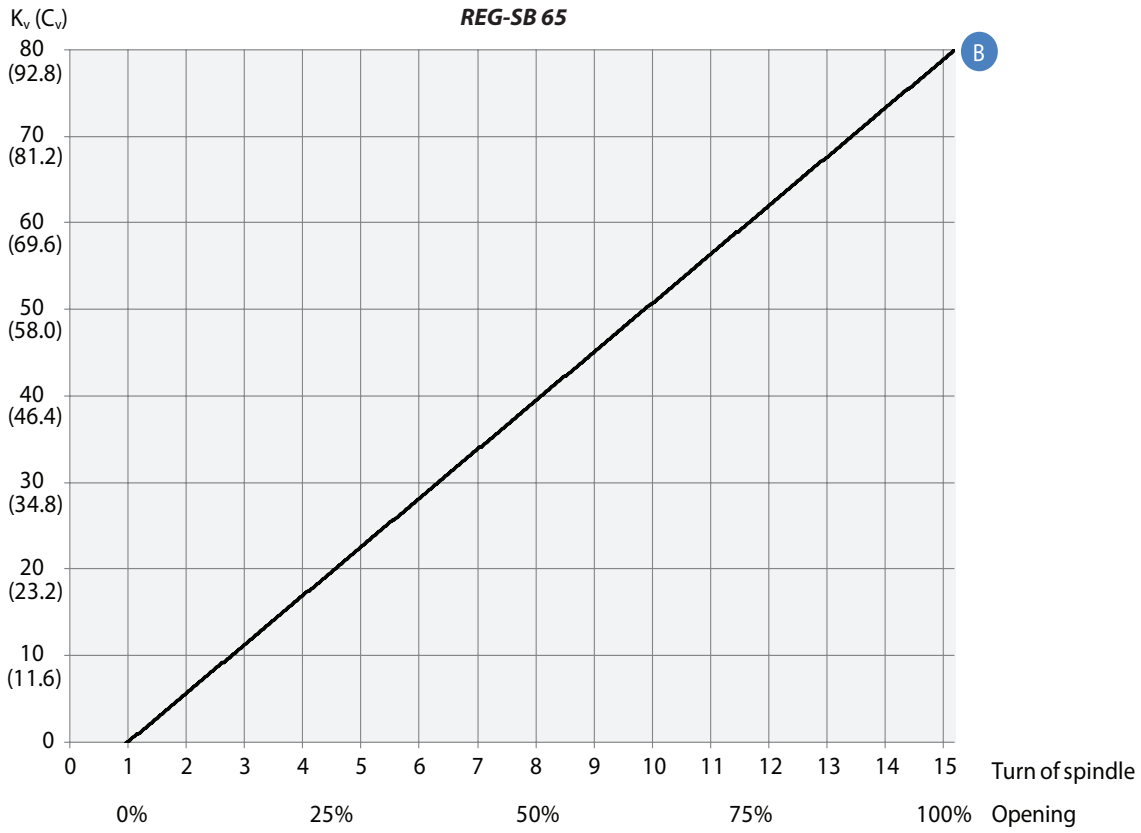

Fig. 5

© Danfoss | DCS (mwa) | 2018.11

Computation and selection
(Continued)

Liquid R 717, density: 670 kg/m³ [42 lb/ft³]

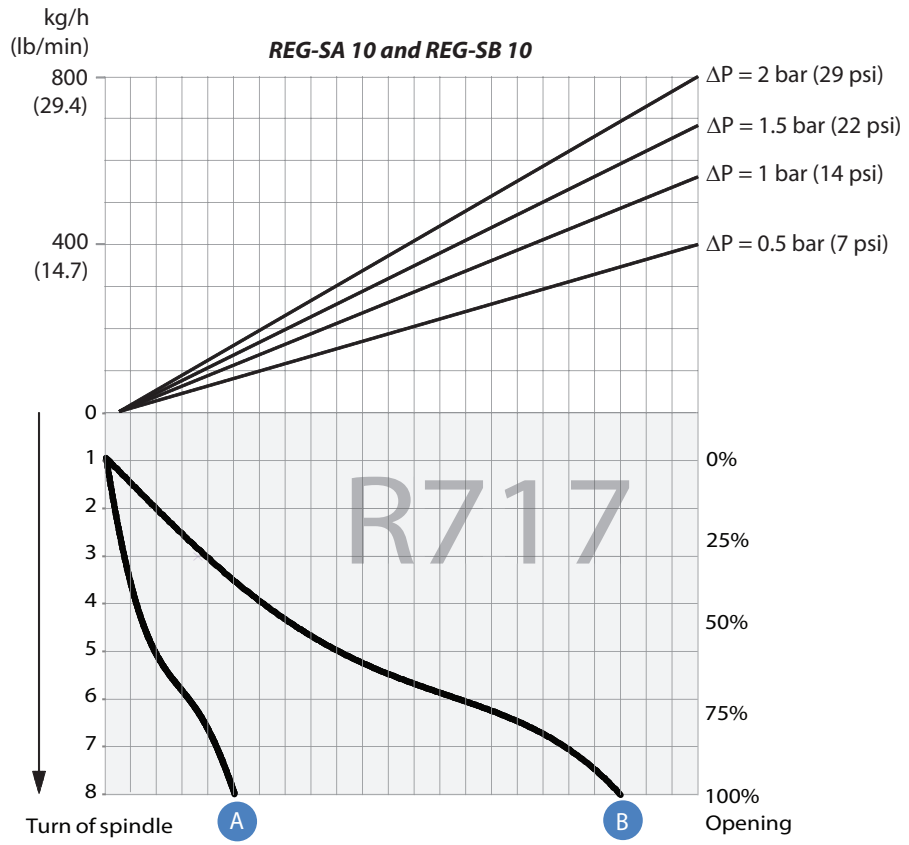

Fig. 6

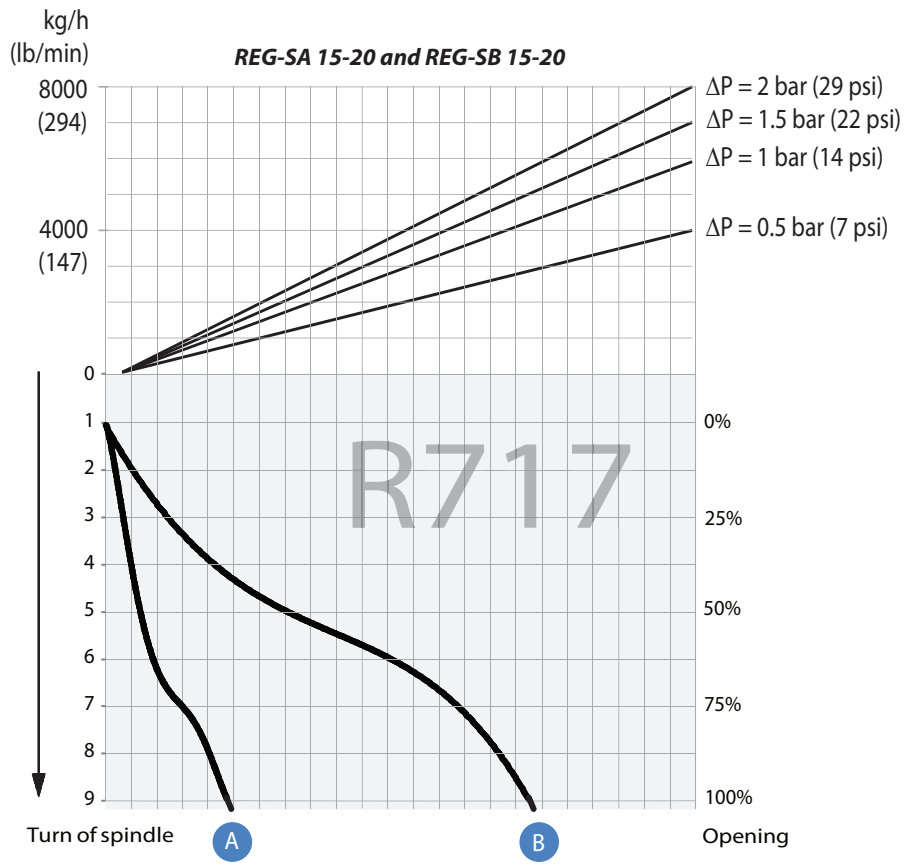

Fig. 7

For choice of valve size and connection see "Connections".

Computation and selection
(Continued)

Liquid R 717, density: 670 kg/m³ [42 lb/ft³]

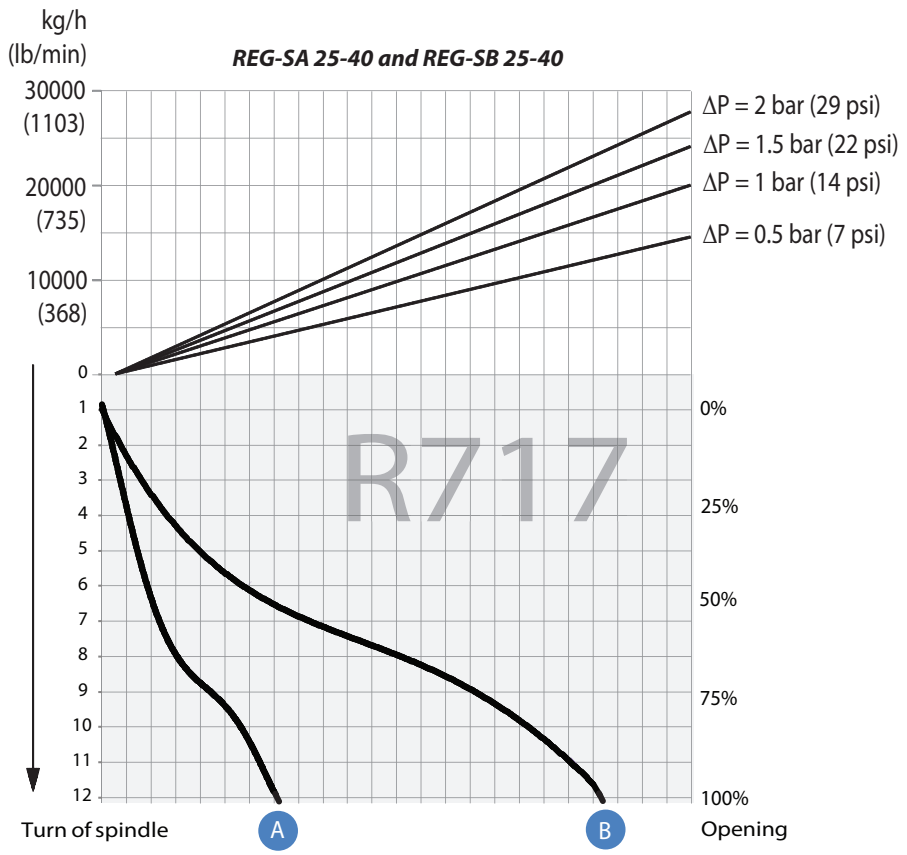

Fig. 8

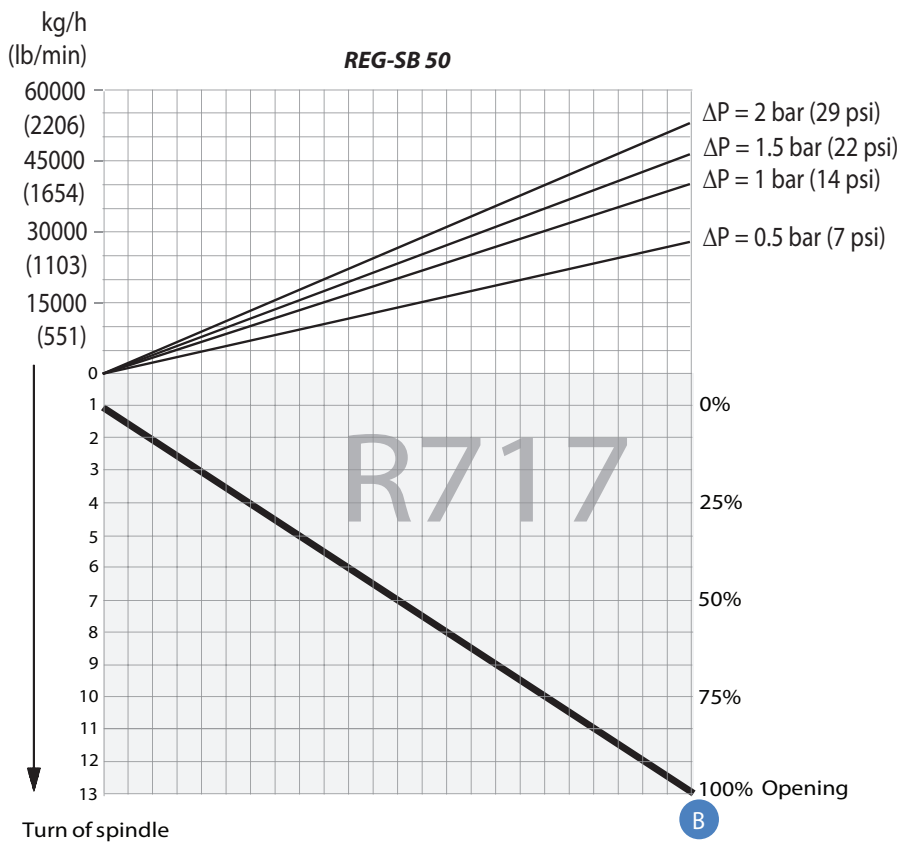

Fig. 9

For choice of valve size and connection see "Connections".

© Danfoss | DCS (mwa) | 2018.11

Computation and selection
(Continued)

Liquid R 717, density: 670 kg/m³ [42 lb/ft³]

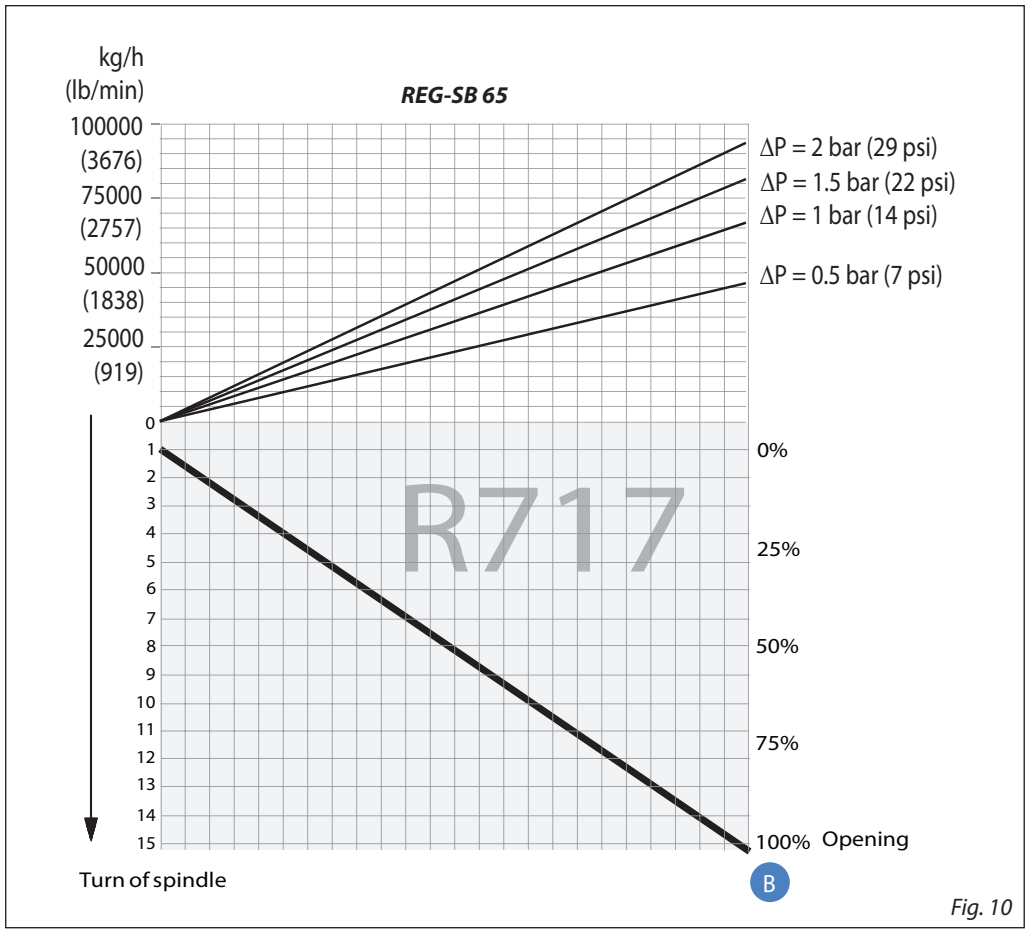

Fig. 10

Calculation factor C_A

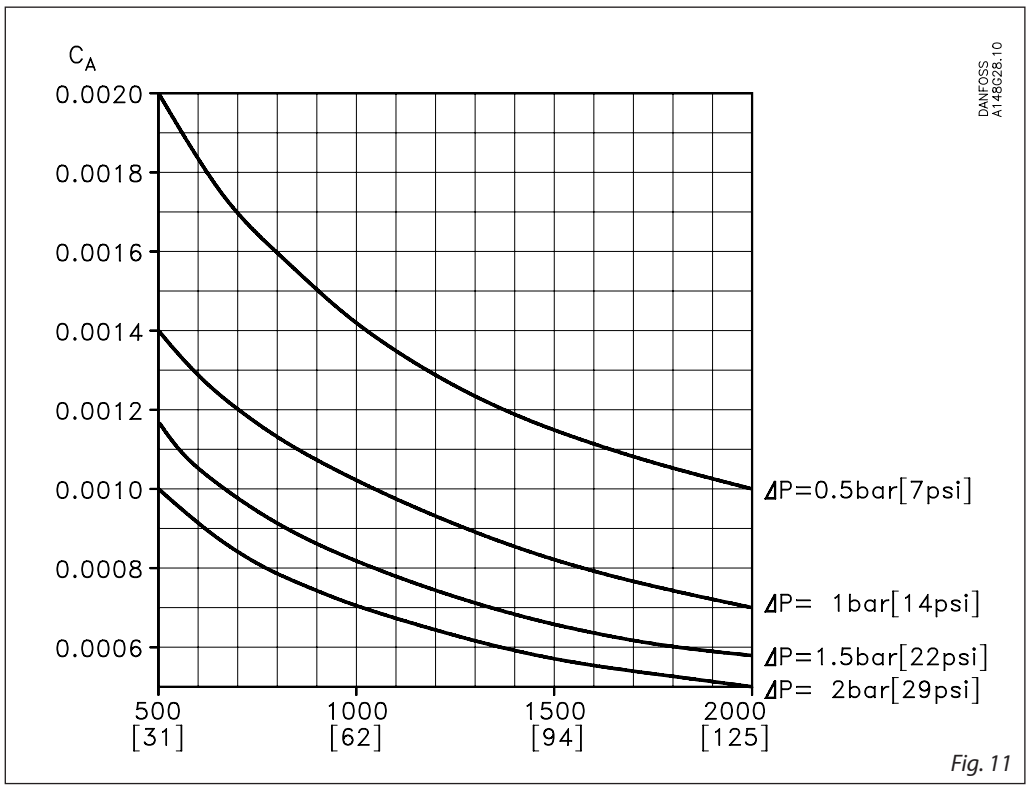

Fig. 11

For choice of valve size and connection see "Connections".

Computation and selection
Example 1.

Refrigerant:	R 717
Refrigerant flow:	2200 kg/h
Pressure drop:	Δp = 0.5 bar

The above mentioned example is illustrated on the following flow rate diagram and shows that REG-SB 15 and 20 with cone B can be used. The main rule is that nominal regulation range should be below 85% opening degree. If the arrowline is crossing 2 cone curves, the smaller cone should be selected if opening degree < 85%.

The example is only correct if the density of the refrigerant is approx. 670 (kg/m³), and there must be no build-up of flash gas in the valve.

Flow rate diagram

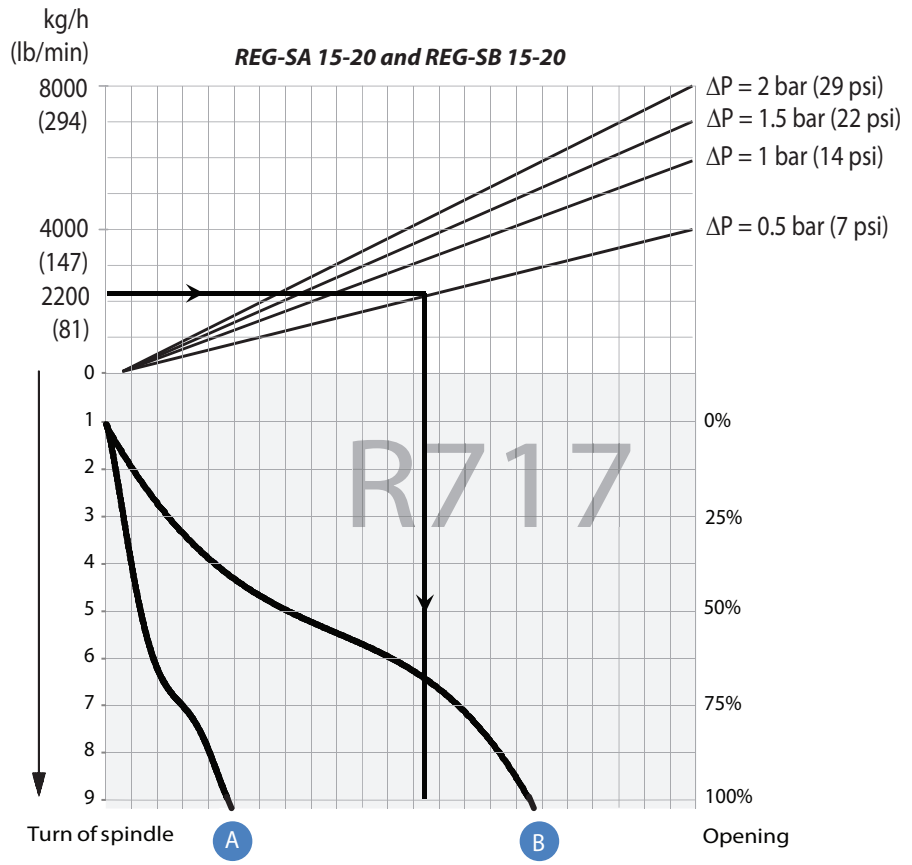

Fig. 12

© Danfoss | DCS (mwa) | 2018.11

Computation and selection
Example 2.

Brine, density	ρ:	1150	[kg/m³]
Brine flow	G:	2,700	[kg/h]
Pressure drop	Δp:	0.5	[bar]

In this example it is not possible to use the selection diagrams (fig. 6 - 10) as the refrigerant in question is not included.

Use the curves of the k_v-values instead (fig. 1 - 5) and calculate the required k_v by means of the formulas in the "Introduction" passage at the beginning of this chapter. Alternatively calculate the k_v-values by means of the calculation factor C_A (fig. 13) and the flow rate diagram (in this example: fig. 14) as per the following calculation example.

Calculation example:

Required k_v-value
C_A = 0.00132 (from fig. 18)
k_v = $C_A \times G$
k_v = 0.00132 × 2,700 [kg/h]
= 3.56 [m³/h]

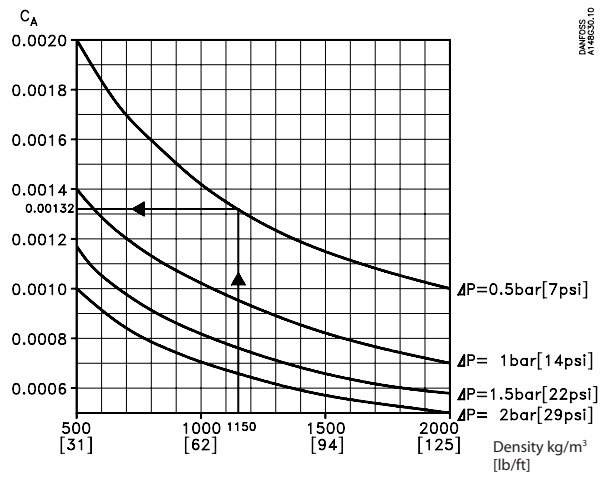

Fig. 13

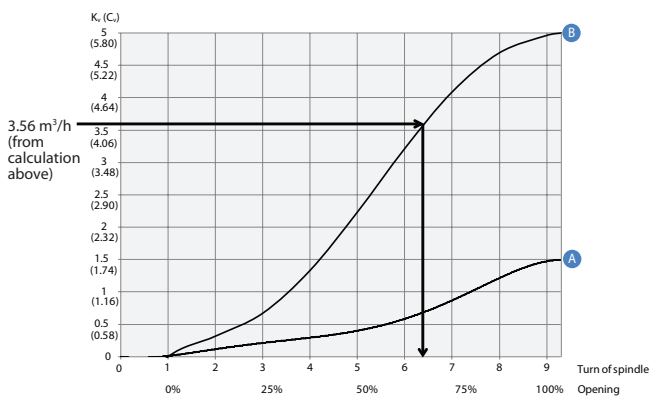

Fig. 14

REG-SB 15 and REG-SB 20 with cone B can be used.

Material specification

REG-SA and REG-SB 10

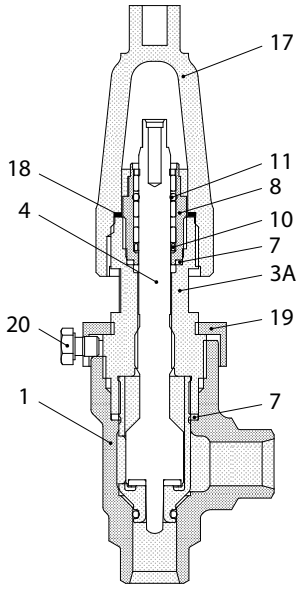

REG-SA and REG-SB 15 - 40

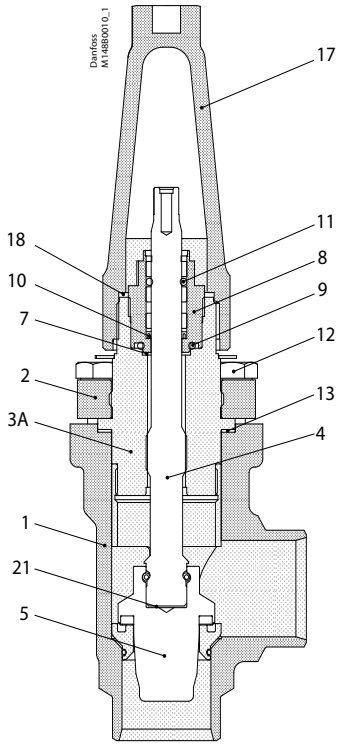

REG-SA and REG-SB 50 - 65

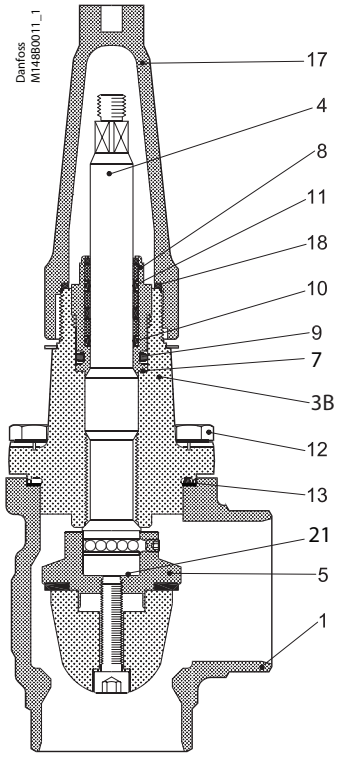

No.	Part	Material	EN	ISO	ASTM
1	Housing	Steel	G20Mn5QT, 10213-3 ---------- P285QH+QT, 10222-4		LCC, A352 ---------- LF2, A350
2	DN 15 - 40 (½ - 1 ½ in) – Bonnet, Flange	Steel	P275 NL EN10028-3		A A662
3A	DN 10 - 40 (3/8 - 1 ½ in) – Bonnet, Insert	Steel	11SMn30 10087	Type 2, R 683-9	1213 SAE J403
3B	DN 50 - 65 (2 - 2 ½ in) – Bonnet, Flange	Steel	P285QH+QT 10222-4		LF2 A350
4	Spindle DN 10 - 65 (¼ - 2 ½ in)	Stainless steel	X8CrNiS 18-9, 17440	Type 17, 683/13	AISI 303
5	Cone	Steel			
7	Packing washer	Aluminium			
8	Packing gland	Stainless Steel	X8CrNiS 18-9, 10088	Type 17, 683/13	AISI 303
9	O-ring	Cloroprene (Neoprene)			
10	Spring loaded Teflon ring	PTFE			
11	O-ring	Cloroprene (Neoprene)			
12	Bolts	Stainless steel	A2-70	A2-70	Type 308
13	Gasket	Fiber, non asbestos			
14	Bottom insert	Steel			
17	Seal cap	Aluminium			
18	Gasket f. seal cap	Nylon			
19	Locking nut	Steel			
20	Screw	Steel			
21	Disk spring	Steel			

© Danfoss | DCS (mwa) | 2018.11

Connections

DIN

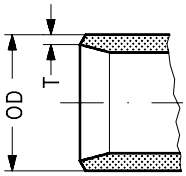

Butt-weld DIN (EN 10220)

	Size [mm]	Size [in]	OD [mm]	T [mm]	OD [in]	T [in]	Cone
REG-SA / SB	10	3/8	17.2	2.3	0.677	0.091	A and B
REG-SA / SB	15 20	1/2 3/4	21.3 26.9	2.3 2.3	0.839 1.059	0.091 0.091	A and B
REG-SA / SB	25 32 40	1 1 1/4 1 1/2	33.7 42.4 48.3	2.6 2.6 2.6	1.327 1.669 1.902	0.103 0.102 0.103	A and B
REG-SB	50	2	60.3	2.9	2.37	0.11	B
REG-SB	65	2 1/2	76.1	2.9	3	0.11	B

ANSI

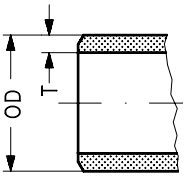

Butt-weld ANSI (B 36.10 Schedule 80)

REG-SA / SB	10	3/8	17.2	3.2	0.677	0.126	A and B
REG-SA / SB	15 2	1/2 3/4	21.3 26.9	3.7 4.0	0.839 1.059	0.146 0.158	A and B
REG-SA / SB	25 32 40	1 1 1/4 1 1/2	33.7 42.4 48.3	4.6 4.9 5.1	1.327 1.669 1.902	0.181 0.193 0.201	A and B

Butt-weld ANSI (B 36.10 Schedule 40)

REG-SB	50	2	60.3	3.9	2.37	0.15	B
REG-SB	65	2 1/2	73.0	5.2	2.87	0.20	B

GOST

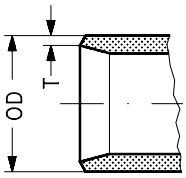

Butt-weld GOST (8734-75 and 8732-78)

	Size [mm]	Size [in]	OD [mm]	T [mm]	OD [in]	T [in]	Cone
REG-SA / SB	10	3 8	14	2	0.551	0.079	A and B
REG-SA / SB	15 20	½ ¾	18 25	2 2.5	0.709 0.984	0.079 0.098	A and B
REG-SA / SB	25 32 40	1 1¼ 1½	32 38 45	3 3 3	1.260 1.496 1.772	0.118 0.118 0.118	A and B
REG-SB	50	2	57	3.5	2.244	0.138	B
REG-SB	65	2½	76.1	2.9	3	0.11	B

SOC

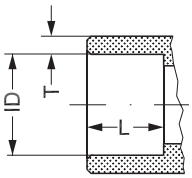

Socket welding ANSI (B 16.11)

	Size [mm]	Size [in]	ID [mm]	T [mm]	ID [in]	T [in]	L [mm]	L [in]	Cone
REG-SA / SB	15 20	1/2 3/4	21.8 27.2	6.0 7.6	0.858 1.071	0.235 0.299	10 13	0.39 0.51	A and B
REG-SA / SB	25 32 40	1 1 1/4 1 1/2	33.9 42.7 48.8	7.2 6.1 6.6	1.335 1.743 1.921	0.284 0.240 0.260	13 13 13	0.51 0.51 0.51	A and B
REG-SB	50	2	61.2	6.2	2.41	0.24	16	0.63	B

FPT

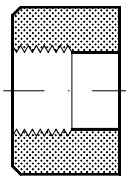

FPT inside pipe thread, NPT (ANSI/ASME B 1.20.1)

	Size [mm]	Size [in]	Inside pipe thread	Cone
REG-SA / SB	15 20	1/2 3/4	(1/2 × 14 NPT) (3/4 × 14 NPT)	A and B
REG-SA / SB	25 32	1 1 1/4	(1 × 11.5 NPT) (1 1/4 × 11.5 NPT)	A and B

Dimensions and weights

REG-SA and REG-SB 10 - 65 in angleway version

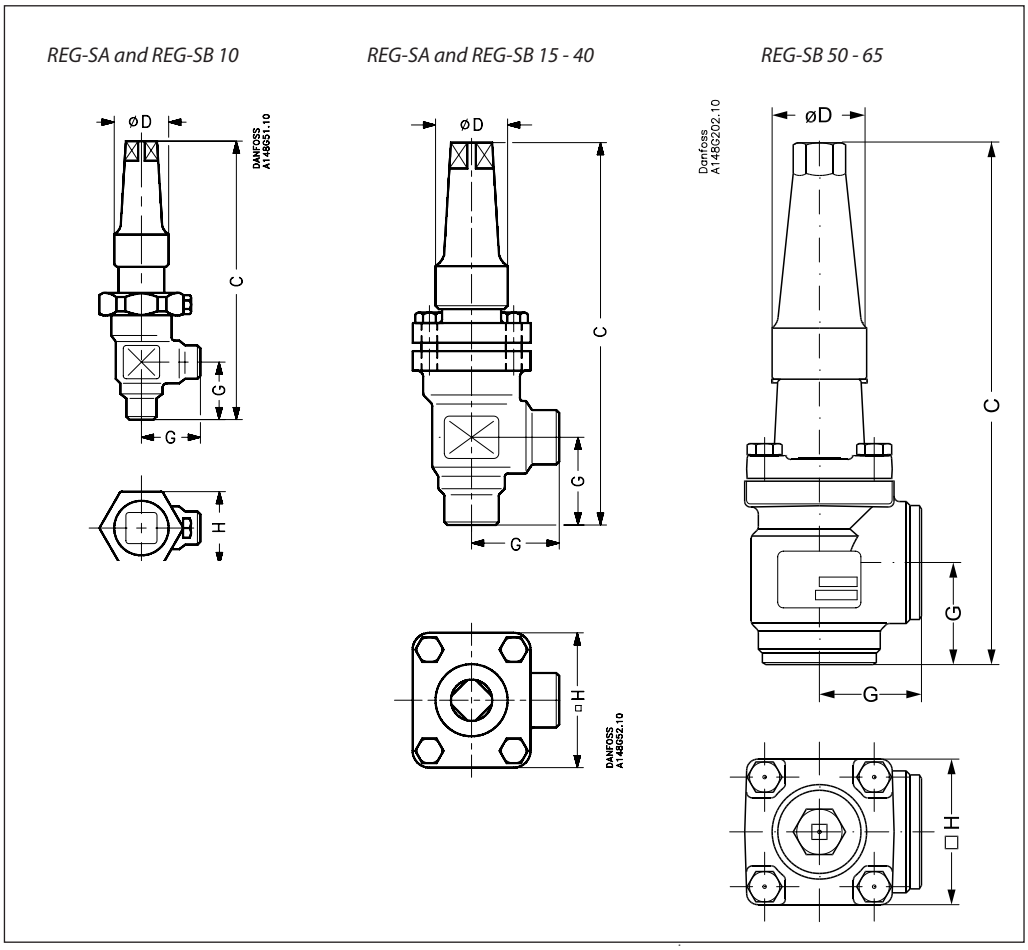

Valve size			C		G		∅D		□H		Weight
REG-SA/SB 10	[mm]		139		30		30		36		0.8 kg
REG-SA/SB (3/8)	[in]		5.47		1.18		1.18		1.42		1.8 lb
REG-SA/SB 15-20	[mm]		182		45		38		60		1.4 kg
REG-SA/SB (½ – 3/4)	[in]		7.17		1.77		1.50		2.36		3.1 lb
REG-SA/SB 25-40	[mm]		237		55		50		70		2.4 kg
REG-SA/SB (1 – 1 ½)	[in]		9.33		2.17		1.97		2.76		5.3 lb
REG-SB 50	[mm]		315		60		50		77		3.2 kg
REG-SB (2 in)	[in]		12.4		2.36		1.97		3.03		7.1 lb
REG-SB 65	mm		335		70		50		90		4.8 kg
REG-SB (2 ½ in)	[in]		13.19		2.76		1.97		3.54		10.6 lb
REG-SA/SB 32 SOC	[mm]		275		62		50		70		2.9 kg
REG-SA/SB (1 ¼ in) SOC	[in]		10.83		2.44		1.97		2.76		6.4 lb
REG-SA/SB 40 SOC	[mm]		275		62		50		70		2.9 kg
REG-SA/SB (1 ½ in) SOC	[in]		10.83		2.44		1.97		2.76		6.4 lb
REG-SB 50 SOC	mm.		320		65		50		77		4.1 kg
REG-SB (2 in) SOC	[in]		12.60		2.56		1.97		3.03		9.0 lb

Specified weights are approximate values only.

© Danfoss | DCS (mwa) | 2018.11

Dimensions and weights
(cont.)

REG-SA and REG-SB 10 - 65 in straightway version

REG-SA and REG-SB 10

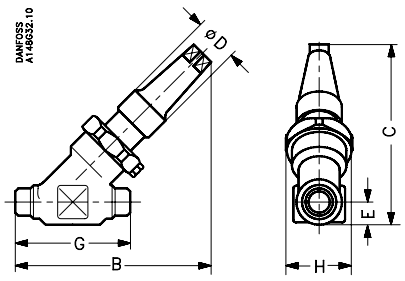

REG-SA and REG-SB 15 - 40

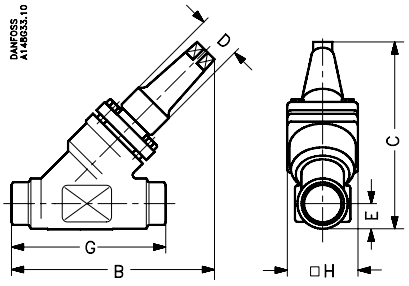

REG-SB 50-65

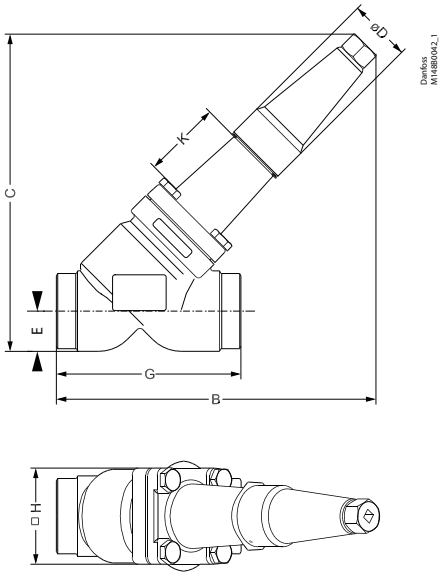

Valve size		C	B	E	G		∅D		□H		Weight
REG-SA/SB 10	[mm]	110	120	13	70		30		36		0.8 kg
REG-SA/SB (3/8)	[in]	4.33	4.72	0.51	2.76		1.18		1.42		1.8 lb
REG-SA/SB 15-20	[mm]	145	155	20	120		38		60		2.0 kg
REG-SA/SB (½ – 3/4)	[in]	5.71	6.10	0.79	4.72		1.50		2.36		4.4 lb
REG-SA/SB 25-40	[mm]	200	215	26	155		50		70		3.0 kg
REG-SA/SB (1 – 1 ½)	[in]	7.87	8.46	1.02	6.10		1.97		2.76		6.6 lb
REG-SB 50	[mm]	257	250	32	148		50		77		4.2 kg
REG-SB (2 in)	[in]	10.12	10.20	1.26	5.83		1.97		3.03		9.3 lb
REG-SB 65	[mm]	280	284	40	176		50		90		6.3 kg
REG-SB (2 ½ in)	[in]	11.02	11.18	1.57	6.93		1.97		3.54		13.9 lb
REG 32 SOC	[mm]	209	222	27.4	155		50		70		3.0 kg
REG (1 ¼) SOC	[in]	8.23	8.74	1.08	6.10		1.97		2.76		6.6 lb
REG 40 SOC	[mm]	213	222	31.0	155		50		70		3.0 kg
REG (1 ½) SOC	[in]	8.39	8.74	1.22	6.10		1.97		2.76		6.6 lb
REG-SB 50 SOC	[mm]	261	266	37	162		50		77		5.1 kg
REG-SB (2 in) SOC	[in]	10.28	10.47	1.26	6.38		6.38		3.03		11.2 lb

Specified weights are approximate values only.

Ordering

How to order
The table below is used to indentify the valve required.

Please note that the type codes only serve to identify the valves, some of which may not form part of the standard product range. For further information please contact your local Danfoss Sales Company.

Type codes

Valve type	REG	Hand operated regulating valves					
Nominal size in mm			Available connection types				
			A	D	G	SOC	FPT
(Valve size measured on the connection diameter)	**10**	DN 10	x	x	x		
	15	DN 15	x	x	x	x	x
	20	DN 20	x	x	x	x	x
	22	DN 22					
	25	DN 25	x	x	x	x	x
	32	DN 32	x	x	x	x	x
	40	DN 40	x	x	x	x	
	50	DN 50	x	x	x	x	
	65	DN 65	x	x			
Connections	**A**	Welding branches: ANSI B 36.10 schedule 80, 15 - 40 (½ – 1 ½ in) Welding branches: ANSI B 36.10 schedule 40, 50 - 65 (2 – 2 ½ in)					
	D	Welding branches: EN 10220					
	G	Welding branches: GOST (8734-75 and 8732-78)					
	SOC	Socket weld: ANSI B 16.11					
	FPT	NPT inside pipe thread: ANSI/ASME B1.20.1					
Valve housing	**ANG**	Angle flow					
	STR	Straight flow					
Cone A	Size:	Flow area [mm²]					
	DN 10	3.02					
	DN 15	36.5					
	DN 20	36.5					
	DN 25	178					
	DN 32	178					
	DN 40	178					
Cone B	Size:	Flow area [mm²]					
	DN 10	16					
	DN 15	115					
	DN 20	115					
	DN 25	531					
	DN 32	531					
	DN 40	531					
	DN 50	822					
	DN 65	1978					

Available combination between valve size, cone type and valve connection

Size	**DN 10 (3/8")**		**DN 15 (½")**		**DN 20 (3/4")**		**DN 22 (7/8")**		**DN 25 (1")**		**DN 32 (1 1/4")**		**DN 40 (1½")**		**DN 50 (2")**		**DN 65 (2½")**	
Cone type	**A**	**B**	**A**	**B**	**A**	**B**	**A**	**B**	**A**	**B**	**A**	**B**	**A**	**B**	**A**	**B**	**A**	**B**
DIN	×	×	×	×	×	×			×	×	×	×	×	×		×		×
ANSI	×	×	×	×	×	×			×	×	×	×	×	×		×		×
GOST	×	×	×	×	×	×			×	×	×	×	×	×		×		
SOC			×	×	×	×			×	×	×	×	×	×		×		
FPT			×	×	×	×			×	×	×	×						

× **= available**

© Danfoss | DCS (mwa) | 2018.11

Ordering
(continued)

Example:
REG-SA (Cone A) 15 DIN angleway = **148B5226**

Important!
Where products need to be certified according to specific certification societies or where higher pressures are required, the relevant information should be included at the time of order.

Complete REG-SA (Cone type A)

Butt-weld DIN (EN 10220)

Size [mm]	Size [in]	Type	Code no.
Angleway *- REG-SA with cone type A*			
10	3/8	REG-SA 10 D ANG	**148B5102**
15	1/2	REG-SA 15 D ANG	**148B5226**
20	3/4	REG-SA 20 D ANG	**148B5326**
25	1	REG-SA 25 D ANG	**148B5426**
32	1 1/4	REG-SA 32 D ANG	**148B5527**
40	1 1/2	REG-SA 40 D ANG	**148B5627**

Butt-weld DIN (EN 10220)

Size [mm]	Size [in]	Type	Code no.
Straightway *- REG-SA with cone type A*			
10	3/8	REG-SA 10 D STR	**148B5104**
15	1/2	REG-SA 15 D STR	**148B5228**
20	3/4	REG-SA 20 D STR	**148B5328**
25	1	REG-SA 25 D STR	**148B5428**
32	1 1/4	REG-SA 32 D STR	**148B5528**
40	1 1/2	REG-SA 40 D STR	**148B5629**

Butt-weld ANSI (B 36.10 Schedule 80)

Size [mm]	Size [in]	Type	Code no.
Angleway *- REG-SA with cone type A*			
10	3/8	REG-SA 10 A ANG	**148B5106**
15	1/2	REG-SA 15 A ANG	**148B5202**
20	3/4	REG-SA 20 A ANG	**148B5302**
25	1	REG-SA 25 A ANG	**148B5402**
32	1 1/4	REG-SA 32 A ANG	**148B5502**
40	1 1/2	REG-SA 40 A ANG	**148B5602**

Butt-weld ANSI (B 36.10 Schedule 80)

Size [mm]	Size [in]	Type	Code no.
Straightway *- REG-SA with cone type A*			
10	3/8	REG-SA 10 A STR	**148B5116**
15	1/2	REG-SA 15 A STR	**148B5212**
20	3/4	REG-SA 20 A STR	**148B5312**
25	1	REG-SA 25 A STR	**148B5412**
32	1 1/4	REG-SA 32 A STR	**148B5512**
40	1 1/2	REG-SA 40 A STR	**148B5612**

Socket welding ANSI (B 16.11)

Size [mm]	Size [in]	Type	Code no.
Angleway *- REG-SA with cone type A*			
15	1/2	REG-SA 15 SOC ANG	**148B5204**
20	3/4	REG-SA 20 SOC ANG	**148B5304**
25	1	REG-SA 25 SOC ANG	**148B5404**
32	1 1/4	REG-SA 32 SOC ANG	**148B5504**
40	1 1/2	REG-SA 40 SOC ANG	**148B5604**

Socket welding ANSI (B 16.11)

Size [mm]	Size [in]	Type	Code no.
Straightway *- REG-SA with cone type A*			
15	1/2	REG-SA 15 SOC STR	**148B5214**
20	3/4	REG-SA 20 SOC STR	**148B5314**
25	1	REG-SA 25 SOC STR	**148B5414**
32	1 1/4	REG-SA 32 SOC STR	**148B5514**
40	1 1/2	REG-SA 40 SOC STR	**148B5614**

FPT inside pipe thread, NPT (ANSI/ASME B 1.20.1)

Size [mm]	Size [in]	Type	Code no.
Angleway *- REG-SA with cone type A*			
15	1/2	REG-SA 15 FTP ANG	**148B5206**
20	3/4	REG-SA 20 FTP ANG	**148B5306**
25	1	REG-SA 25 FTP ANG	**148B5406**
32	1 1/4	REG-SA 32 FTP ANG	**148B5506**

FPT inside pipe thread, NPT (ANSI/ASME B 1.20.1)

Size [mm]	Size [in]	Type	Code no.
Straightway *- REG-SA with cone type A*			
15	1/2	REG-SA 15 FTP STR	**148B5216**
20	3/4	REG-SA 20 FTP STR	**148B5316**
25	1	REG-SA 25 FTP STR	**148B5416**
32	1 1/4	REG-SA 32 FTP STR	**148B5516**

D = Butt-weld DIN
A = Butt-weld ANSI
SOC = Socket weld
FPT = Inside pipe thread

ANG = Angleway
STR = Straightway

Ordering
(continued)

Example:
REG-SB (Cone B) 15 DIN angleway = **148B5227**

Important!
Where products need to be certified according to specific certification societies or where higher pressures are required, the relevant information should be included at the time of order.

Complete REG-SB (Cone type B)

Butt-weld DIN (EN 10220)

Size [mm]	Size [in]	Type	Code no.
Angleway *- REG-SB with cone type B*			
10	3/8	REG-SB 10 D ANG	**148B5103**
15	1/2	REG-SB 15 D ANG	**148B5227**
20	3/4	REG-SB 20 D ANG	**148B5327**
25	1	REG-SB 25 D ANG	**148B5427**
32	1 1/4	REG-SB 32 D ANG	**148B5526**
40	1 1/2	REG-SB 40 D ANG	**148B5626**
50	2	REG-SB 50 D ANG	**148B5726**
65	2 1/2	REG-SB 65 D ANG	**148B5826**

Butt-weld DIN (EN 10220)

Size [mm]	Size [in]	Type	Code no.
Straightway *- REG-SB with cone type B*			
10	3/8	REG-SB 10 D STR	**148B5105**
15	1/2	REG-SB 15 D STR	**148B5229**
20	3/4	REG-SB 20 D STR	**148B5329**
25	1	REG-SB 25 D STR	**148B5429**
32	1 1/4	REG-SB 32 D STR	**148B5529**
40	1 1/2	REG-SB 40 D STR	**148B5628**

Butt-weld ANSI (B 36.10 Schedule 80)

Size [mm]	Size [in]	Type	Code no.
Angleway *- REG-SB with cone type B*			
10	3/8	REG-SB 10 A ANG	**148B5107**
15	1/2	REG-SB 15 A ANG	**148B5203**
20	3/4	REG-SB 20 A ANG	**148B5303**
25	1	REG-SB 25 A ANG	**148B5403**
32	1 1/4	REG-SB 32 A ANG	**148B5503**
40	1 1/2	REG-SB 40 A ANG	**148B5603**

Butt-weld ANSI (B 36.10 Schedule 80)

Size [mm]	Size [in]	Type	Code no.
Straightway *- REG-SB with cone type B*			
10	3/8	REG-SB 10 A STR	**148B5117**
15	1/2	REG-SB 15 A STR	**148B5213**
20	3/4	REG-SB 20 A STR	**148B5313**
25	1	REG-SB 25 A STR	**148B5413**
32	1 1/4	REG-SB 32 A STR	**148B5513**
40	1 1/2	REG-SB 40 A STR	**148B5613**

Butt-weld ANSI (B 36.10 Schedule 40)

Size [mm]	Size [in]	Type	Code no.
Angleway *- REG-SB with cone type B*			
50	2	REG-SB 50 A ANG	**148B5706**
65	2 1/2	REG-SB 65 A ANG	**148B5806**

Butt-weld ANSI (B 36.10 Schedule 40)

Size [mm]	Size [in]	Type	Code no.
Straightway *- REG-SB with cone type B*			
50	2	REG-SB 50 A STR	**148B5724**
65	2 1/2	REG-SB 65 A STR	**148B5809**

Socket welding ANSI (B 16.11)

Size [mm]	Size [in]	Type	Code no.
Angleway *- REG-SB with cone type B*			
15	1/2	REG-SB 15 SOC ANG	**148B5205**
20	3/4	REG-SB 20 SOC ANG	**148B5305**
25	1	REG-SB 25 SOC ANG	**148B5405**
32	1 1/4	REG-SB 32 SOC ANG	**148B5505**
40	1 1/2	REG-SB 40 SOC ANG	**148B5605**
50	2	REG-SB 50 SOC ANG	**148B5727**

Socket welding ANSI (B 16.11)

Size [mm]	Size [in]	Type	Code no.
Straightway *- REG-SB with cone type B*			
15	1/2	REG-SB 15 SOC STR	**148B5215**
20	3/4	REG-SB 20 SOC STR	**148B5315**
25	1	REG-SB 25 SOC STR	**148B5415**
32	1 1/4	REG-SB 32 SOC STR	**148B5515**
40	1 1/2	REG-SB 40 SOC STR	**148B5615**
50	2	REG-SB 50 SOC STR	**148B5725**

FPT inside pipe thread, NPT (ANSI/ASME B 1.20.1)

Size [mm]	Size [in]	Type	Code no.
Angleway *- REG-SB with cone type B*			
15	1/2	REG-SB 15 FTP ANG	**148B5207**
20	3/4	REG-SB 20 FTP ANG	**148B5307**
25	1	REG-SB 25 FTP ANG	**148B5407**
32	1 1/4	REG-SB 32 FTP ANG	**148B5507**

FPT inside pipe thread, NPT (ANSI/ASME B 1.20.1)

Size [mm]	Size [in]	Type	Code no.
Straightway *- REG-SB with cone type B*			
15	1/2	REG-SB 15 FTP STR	**148B5217**
20	3/4	REG-SB 20 FTP STR	**148B5317**
25	1	REG-SB 25 FTP STR	**148B5417**
32	1 1/4	REG-SB 32 FTP STR	**148B5517**

D = Butt-weld DIN
A = Butt-weld ANSI
SOC = Socket weld
FPT = Inside pipe thread

ANG = Angleway
STR = Straightway

© Danfoss | DCS (mwa) | 2018.11

Ordering REG-SA/SB from the parts programme

Example
(select from table 1 and 2)

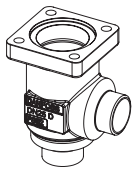

Valve housing, size 25 (1 in.),
DIN butt weld, angleway,
148B5452
Table 1

+

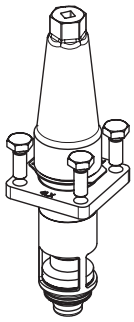

Top part, REG-SA
size 25 (1 in.)
148B5480
Table 2

=

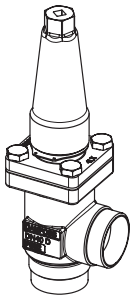

Table 1
SVL valve housings w/different connections

Sizes [DN]		DN 10 mm (3/8 in.)						DN 15-65 mm (½ - 2½ in.)				
		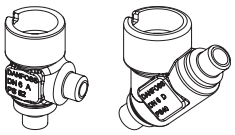						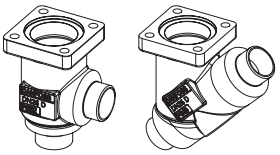				
		Valve Housing SVL										
		DIN-Butt weld		ANSI-Butt weld		GOST-Butt-weld		SOC		FPT		T
mm	in.	ANG	STR	ANG	STR	ANG	STR	ANG	STR	ANG	STR	ANG
10	3/8	148B5122	148B5123	148B5124	148B5125	148B5134	148B5135					
15	½	148B5252	148B5253	148B5254	148B5255	148B5391	148B5392	148B5256	148B5257	148B5258	148B5259	
20	¾	148B5352	148B5353	148B5354	148B5355	148B5393	148B5394	148B5356	148B5357	148B5358	148B5359	
25	1	148B5452	148B5453	148B5454	148B5455	148B5498	148B5499	148B5456	148B5457	148B5458	148B5459	
32	1¼	148B5576	148B5577	148B5578	148B5579	148B5593	148B5594	148B5580	148B5581	148B5582	148B5583	
40	1½	148B5652	148B5653	148B5654	148B5655	148B5681	148B5682	148B5656	148B5657			
50	2	148B5741	148B5742	148B5743	148B5744	148B5759	148B5760	148B5745	148B5746			
65	2½	148B5816	148B5817	148B5818	148B5819	148B5816	148B5817	148B5816	148B5817			

Table 2
REG complete top part including gaskets and bolts

		REG-SA/SB 10		REG-SA/SB 15-65		REG-LA/LB 15-40	
		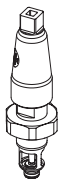		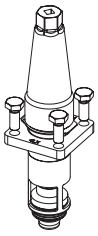		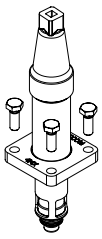	
Sizes [DN]		Complete top part					
mm	in.	REG-SA		REG-SB		REG-LA	REG-LB
10	3/8	148B5112		148B5113			
15	½	148B5280		148B5281		148B6401	148B6402
20	¾						
25	1	148B5480		148B5481		148B6403	148B6404
32	1¼						
40	1½						
50	2			148B5734			
65	2½			148B5824			

Replacement kit (O-ring replacement) for R717 Ammonia Heat Pump and Propylene applications (including ID tag)*

Size (DN)		O-ring kit for	
mm	in.	R717 Heat pump	R1270 Propylene
10	3/8	148B6084	148B6085
15	½	148B6070	148B6077
20	¾		
25	1	148B6071	148B6078
32	1¼		
40	1½		

* Replacement kits for R717 Ammonia Heat Pump is applicable for continuous operating temperature between +100°C to 150°C (212°F to 302°F)

ENGINEERING
TOMORROW

Hand regulating valves

Types REG-SA and REG-SB, 65 bar (943 psi)

Contents **Page**

Features 89
Technical data 90
Design 90
Computation and selection 91
Material specification 99
Dimensions and weights 100
Connections 102
Ordering 102

AI273641142831en-000102 | 2018.08

ENGINEERING
TOMORROW

Hand regulating valves

Types REG-SA and REG-SB, 65 bar (943 psi)

REG-SA and REG-SB are angleway and straightway hand regulating valves, which act as normal stop valves in closed position.

The valves are available in two different versions – REG-SA and REG-SB designed for regulation purposes in liquid and expansion lines.

The valves are designed to meet the strict quality requirements on refrigerating/heat pump installations specified by the international classification societies and are carefully designed to present favourable flow conditions and accurate linear characteristics.

REG-SA and REG-SB are equipped with vented cap and internal backseating enables replacement of the spindle seal whilst the valve is active, i.e. under pressure.

Features

- Modular Concept:
  - Each valve housing is available with DIN and ANSI butt weld connection and in several different sizes.
  - Possible to convert REG-SA or REG-SB to any other product in the FlexlineTM SVL family (shut-off valve, check & stop valve, check valve or strainer) just by replacing the complete top part.
- Fast and easy valve overhaul service. It is easy to replace the top part and no welding is needed.
- Designed to ensure perfect regulation
- Internal backseating enables replacement of the spindle seal whilst the valve is active, i.e. under pressure.
- Easy to disassemble for inspection and possible repair.
- Acts as a normal stop valve in closed position.
- Housing and bonnet material is low temperature steel according to requirements of the Pressure Equipment Directive and other international classification authorities.
- Exact capacity and setting of the valve can be calculated for all refrigerants by means of Coolselector™.
- Classification: DNV, CRN, BV, EAC etc.
  To get an updated list of certification on the products please contact your local Danfoss Sales Company.
- Equipped with 42CrMo5 bolts to withstand high pressure.
- Service kits with replacement O-rings for R717 Heat Pump and R1270 Propylene include separate ID-ring for ID of application

Technical data

- *Refrigerants*
  Applicable to HCFC, HFC, R717 (Ammonia), R744 (CO_2) and flammable refrigerants.
  For further information refer to the product instruction for REG-SA and REG-SB.
- *Temperature range*
  –60/+150°C (–76/+302°F).
- *Max. working pressure*
  65 bar (943 psig).
  With O-ring replaced for valves up to DN40 (Service kit):
  Heat pump configuration: R717 - 65 bar (943 psi) @ +100°C to +150°C (+212°F to +302°F) continuous.
  Propylene configuration: R1270 - 65 bar (943 psi) @ -60°C to 150°C (-76°F to 302°F).

Design

Housing
Housing is Standard SVA angleway or straightway housing allowing other inserts from the SVL platform to be installed.
Material is special, cold resistant steel

The cone
The valves are available in two different versions – REG-SA with an A cone and REG-SB with a B cone. The A cone is designed for expansion lines, while the B cone is designed for regulating purposes e.g. liquid lines.

The valve cone is designed to ensure perfect regulation and provide an extensive regulating area. Irrespective of the refrigerant used, it is easy to obtain the correct capacity. A cone seal ring provides perfect sealing at a minimum closing momentum.

The valve cone can be turned on the spindle, thus there will be no friction between the cone and the seat when the valve is opened and closed.
Spindle
The spindle is made of polished stainless steel, which is ideal for O-ring sealing.

Packing gland - REG-SA and REG-SB
The "full temperature range" packing gland ensures perfect tightness in the whole range: –60/+150°C (–76/+302°F). The packing glands are equipped with a scraper ring to prevent penetration of dirt and ice.

Installation
Install the valve with the spindle up or in horizontal position. The flow must be directed towards the cone.

The valve is designed to withstand high internal pressure. However, the piping system in general should be designed to avoid liquid traps and reduce the risk of hydraulic pressure caused by thermal expansion.

For further information refer to product instruction for REG-SA and REG-SB.

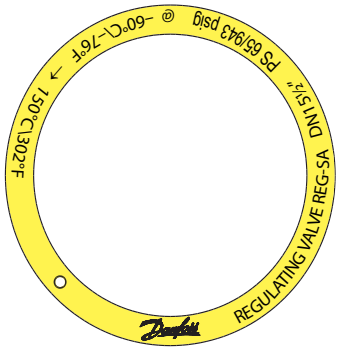

Example of marking ring, REG-SA

ID ring for special application
After converting a REG-SA/SB (DN 10-40) valve for Heat Pump/Propylene applications (replacing O-ring) the color marked ID tag included in the service kit must be fixed to the valve as shown in figure to the right.

The ID tag indicates the special application and identifies the installed O-ring.

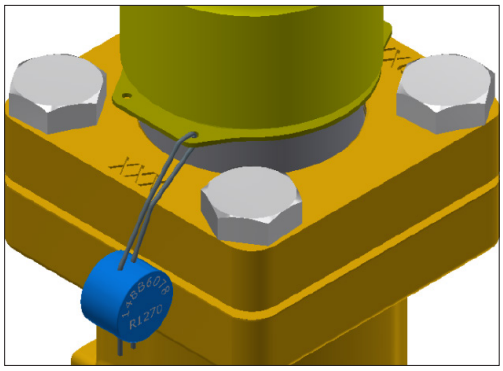

Pressure Equipment Directive (PED)
SVL valves are approved according to the European standard specified in the Pressure Equipment Directive and are CE marked.

For further details / restrictions - see Installation guide.

	SVL		
Nominal bore	DN≤ 25 mm (1 in.)	DN32-80 mm (1¼ - 3 in.)	DN100 - 200 mm (4-8 in.)
Classified for	Fluid group I		
Category	Article 3, paragraph 3	II	III

© Danfoss | DCS (mwa) | 2018.11

Computation and selection

Introduction
In refrigeration plants, regulating valves are primarily used in liquid lines in order to regulate the flow of refrigerant. The valves can, however, also be used as expansion valves. From a calculation point of view the two fields of application are very different.

Normal flow is the term used to describe the general case where the flow through the valve is proportional to the square root of the pressure drop across it and inversely proportional to the density of the refrigerant (Bernouillis equation).

This relationship between mass flow, pressure drop and density satisfies the majority of all valve applications with refrigerants and brines.

Normal flow is characterised by turbulent flow through the valve without any phase change. The following capacity curves are based on the above mentioned assumption.

Application of the regulating valves outside the normal flow area will reduce the capacity of the valve considerably. In such cases it is recommended to use Coolselector®2.

Location of valve in system (marked with grey)

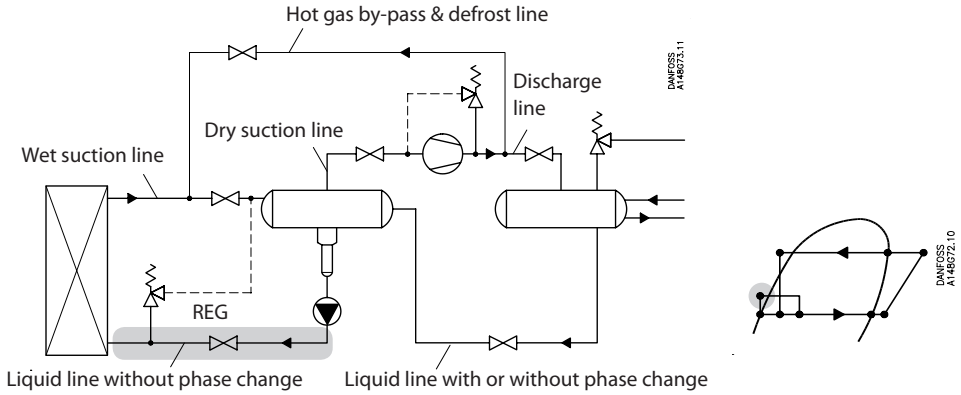

Sizing regulating valve for liquid flow
Liquid refrigerants: Use the liquid tables, fig. 6 - 10. For other refrigerants and brines, "Normal flow" (Turbulent flow); see below and use the flow coefficient tables (fig. 1 - 5).

SI-units

Mass flow:

$$k_v = \frac{G}{\sqrt{\rho \times 1000 \times \Delta p}} = G \times C_A \, [m^3/h]$$

Volume flow:

$$k_v = \frac{\dot{V}}{\sqrt{\frac{1000 \times \Delta p}{\rho}}} \, [m^3/h]$$

Imperial units

Mass flow:

$$C_v = \frac{0.95 \times G}{\sqrt{\rho \times \Delta p}} = 31.6 \times G \times C_A \, [USgal/min.]$$

Volume flow:

$$C_v = \frac{0.127 \times \dot{V}}{\sqrt{\frac{\Delta p}{\rho}}} \, [USgal/min.]$$

k_v	[m³/h]	Quantity [m³/h] of water flowing through a valve at a pressure loss of 1 bar (according to VDE/VDI Norm 2173).
P_1	[bar]	Pressure before the valve (upstream).
P_2	[bar]	Pressure after the valve (downstream).
Δp	[bar]	Actual pressure loss across the valve (P_1–P_2).
G	[kg/h]	Mass flow through the valve.
$\dot{V}$	[m³/h]	Volume flow through the valve.
ρ	[kg/m³]	Density of the refrigerant before the valve.
C_A		Calculation factor (fig. 11).

C_v	[US gal/min]	Quantity [US gal/min] of water flowing through a valve at a pressure loss of 1 psi.
P_1	[psi]	Pressure before the valve (upstream).
P_2	[psi]	Pressure after the valve (downstream).
Δp	[psi]	Actual pressure loss across the valve (P_1–P_2).
G	[lb/min]	Mass flow through the valve.
$\dot{V}$	[US gal/min]	Volume flow through the valve.
ρ	[lb/ft³]	Density of the refrigerant before the valve
C_A		Calculation factor (fig. 11).

Computation and selection

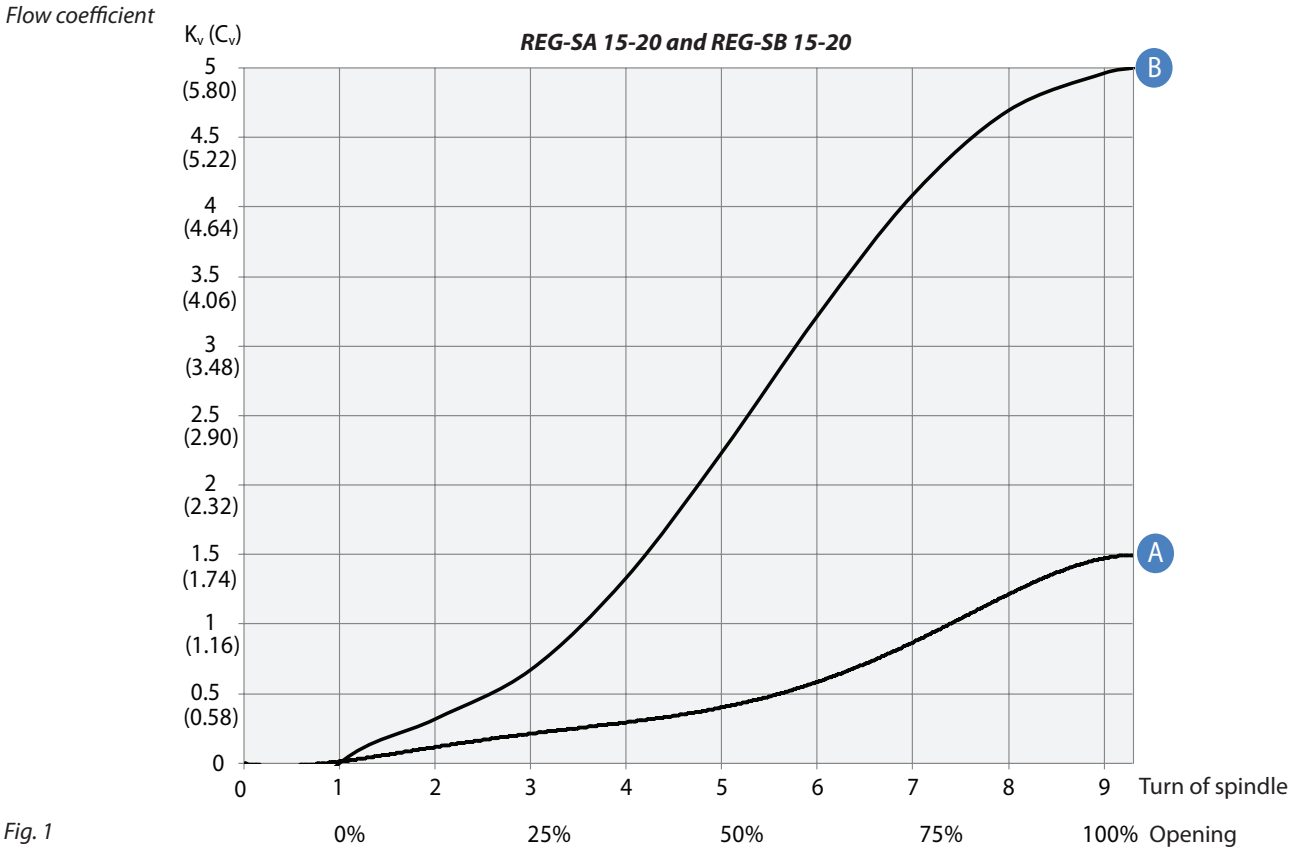

Fig. 1

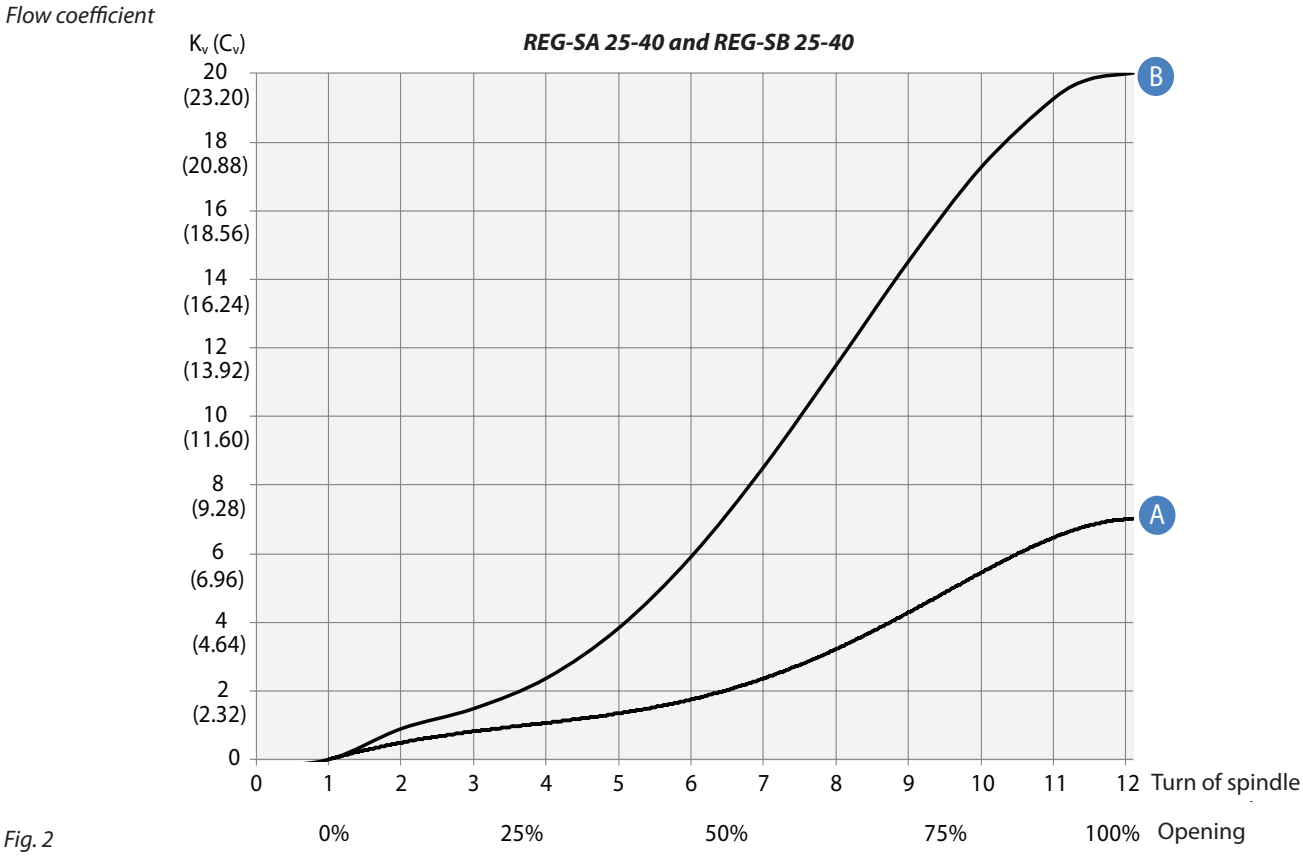

Fig. 2

© Danfoss | DCS (mwa) | 2018.11

Computation and selection *(Continued)*

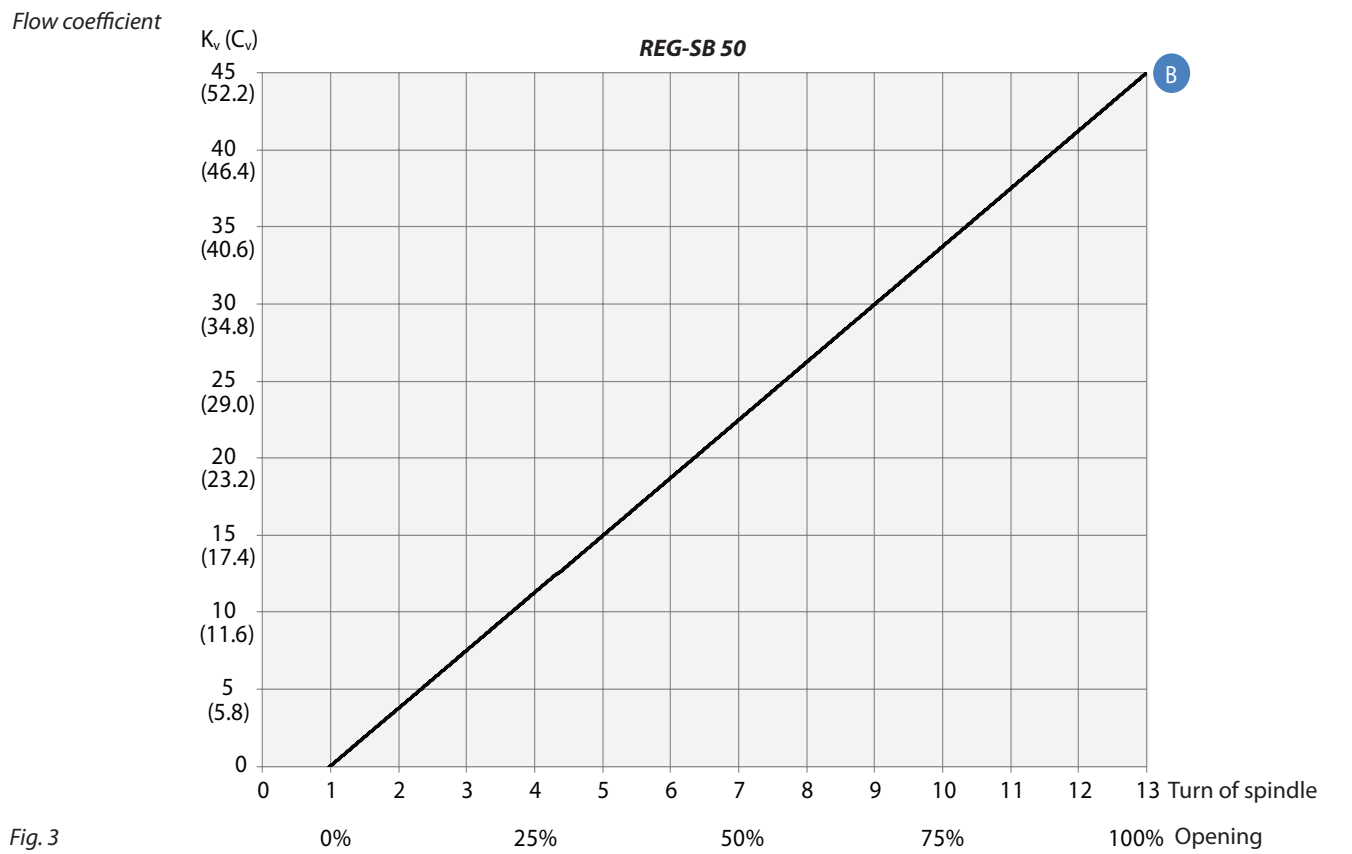

Fig. 3

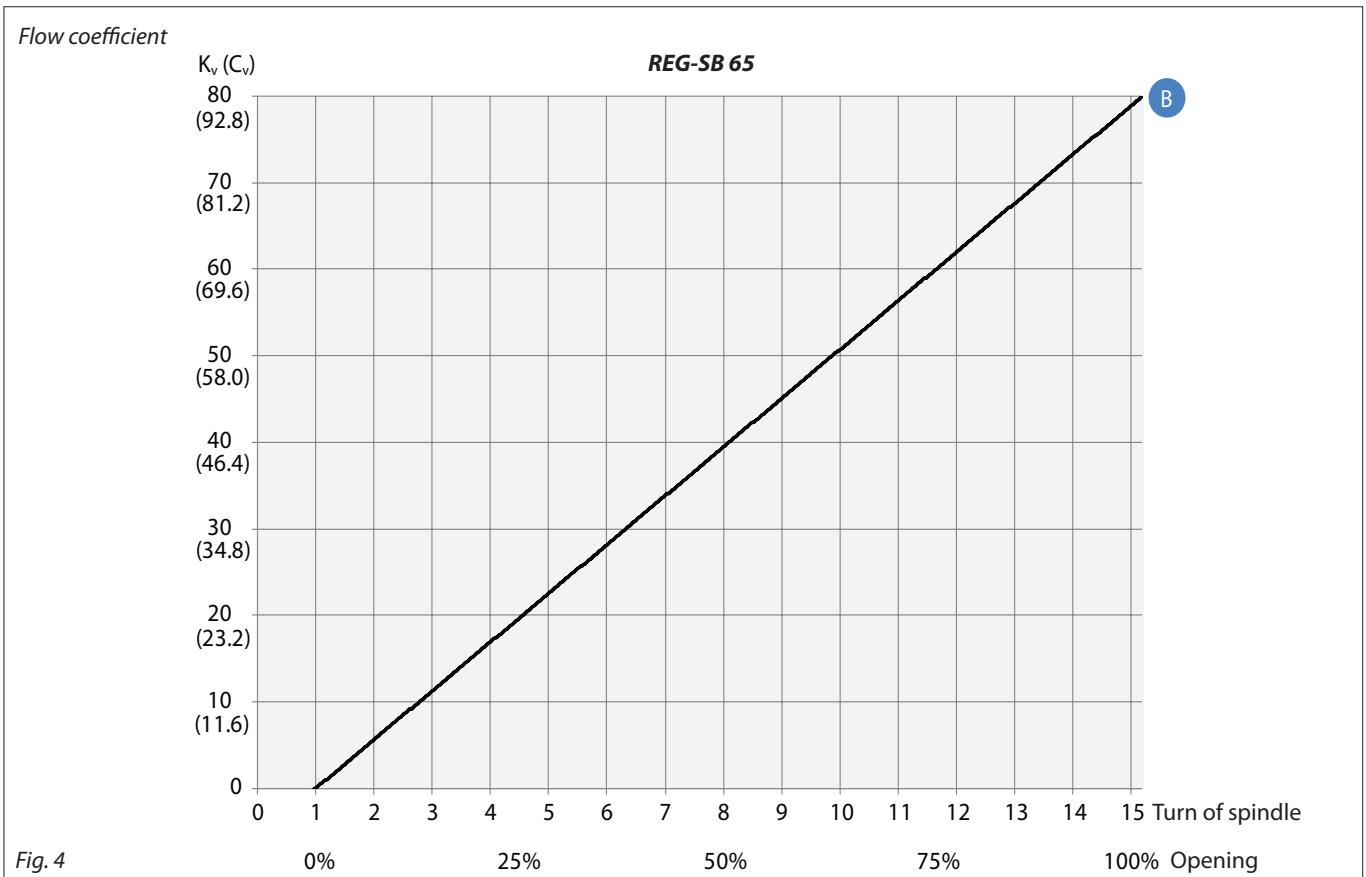

Fig. 4

Computation and selection
(Continued)

Liquid R 717, density: 670 kg/m³ [42 lb/ft³]

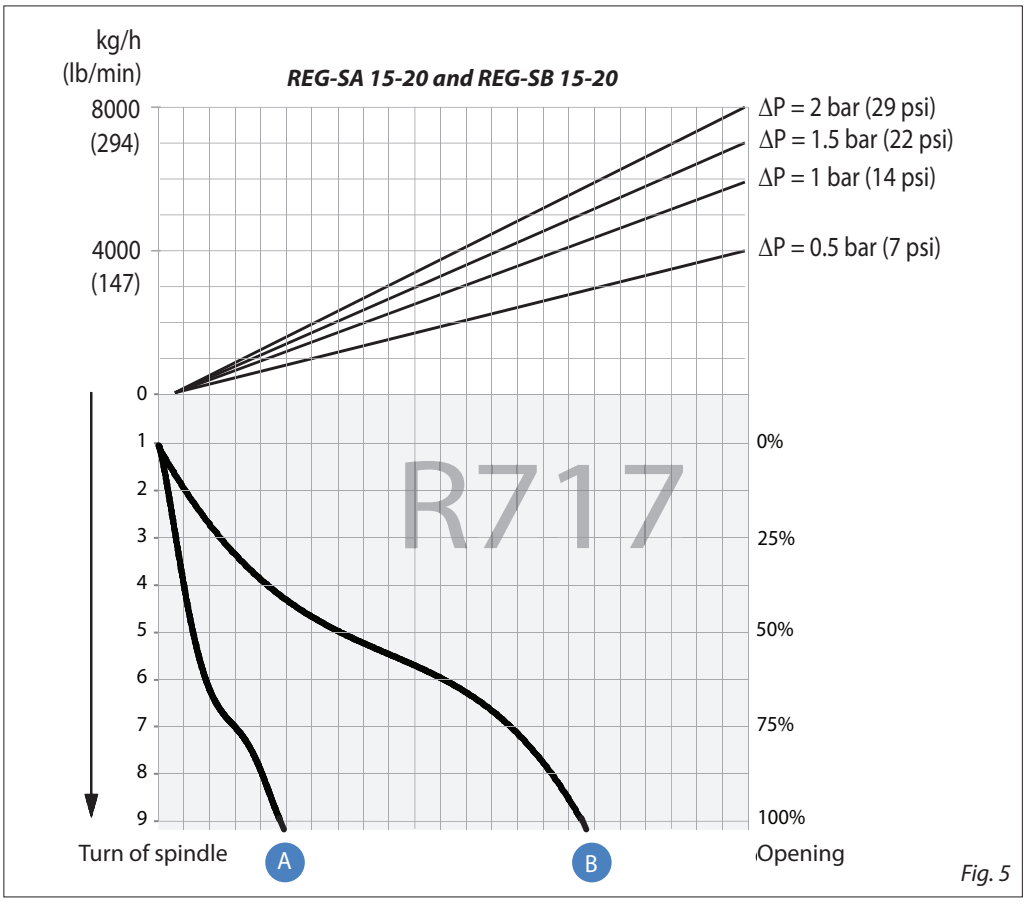

Fig. 5

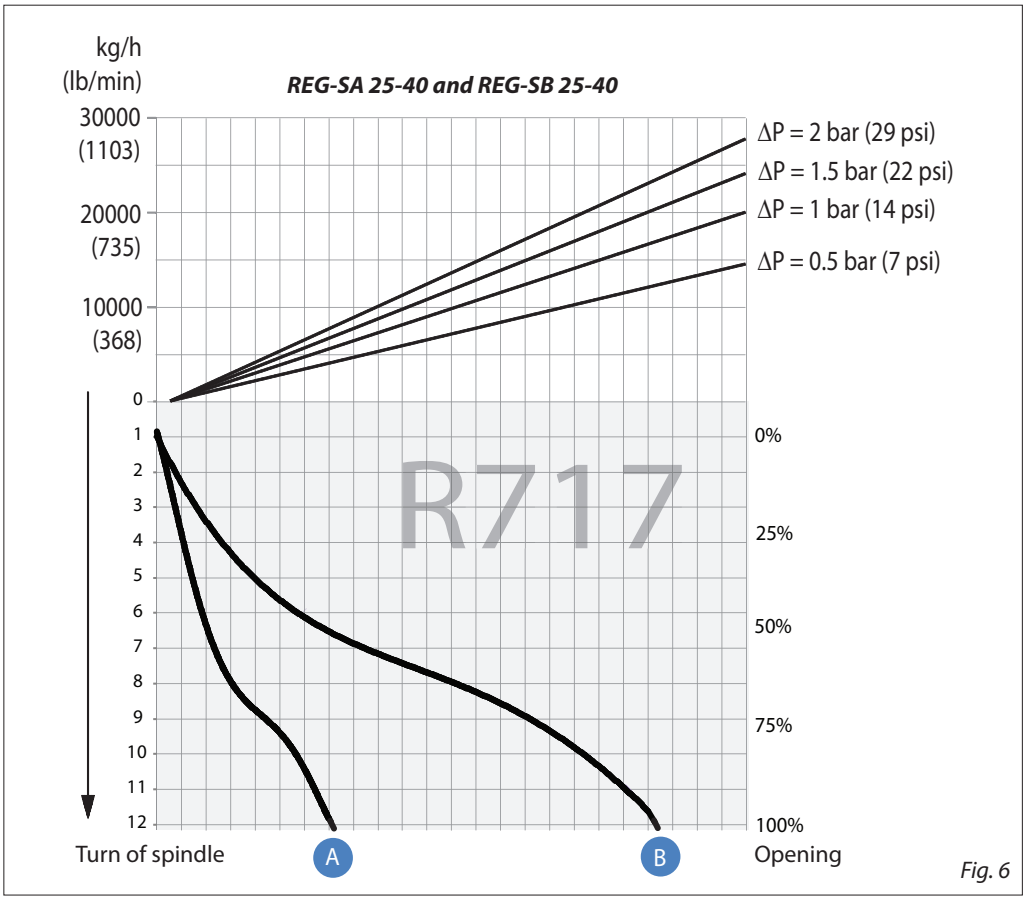

Fig. 6

For choice of valve size and connection see "Connections".

© Danfoss | DCS (mwa) | 2018.11

Computation and selection
(Continued)

Liquid R 717, density: 670 kg/m³ [42 lb/ft³]

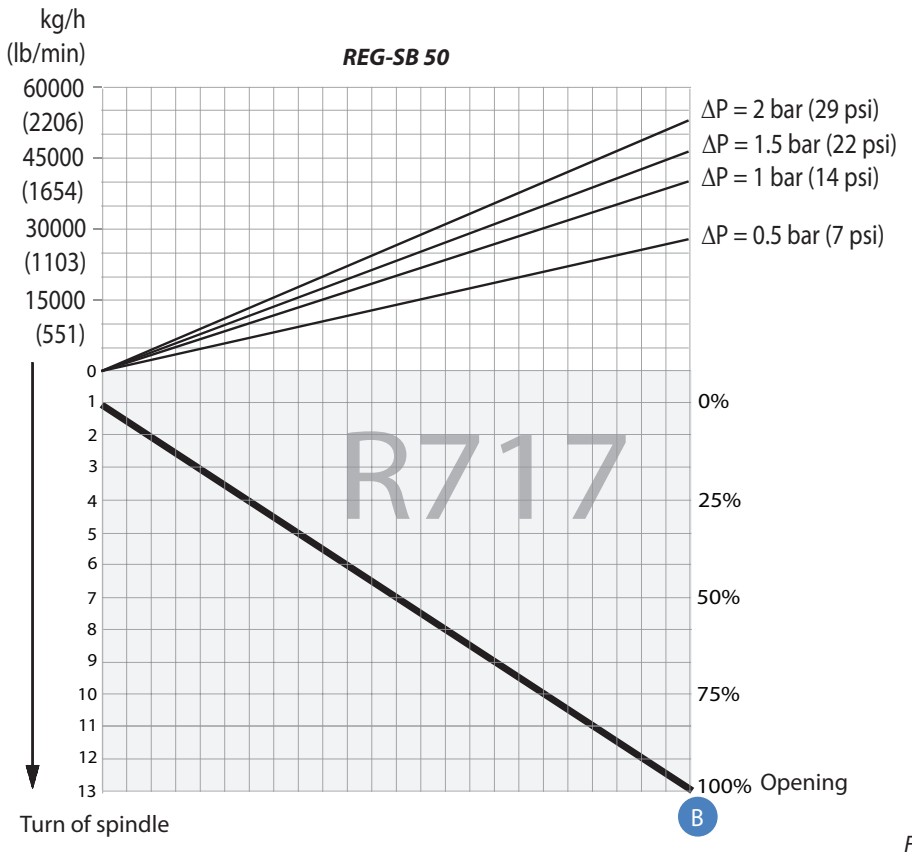

Fig. 7

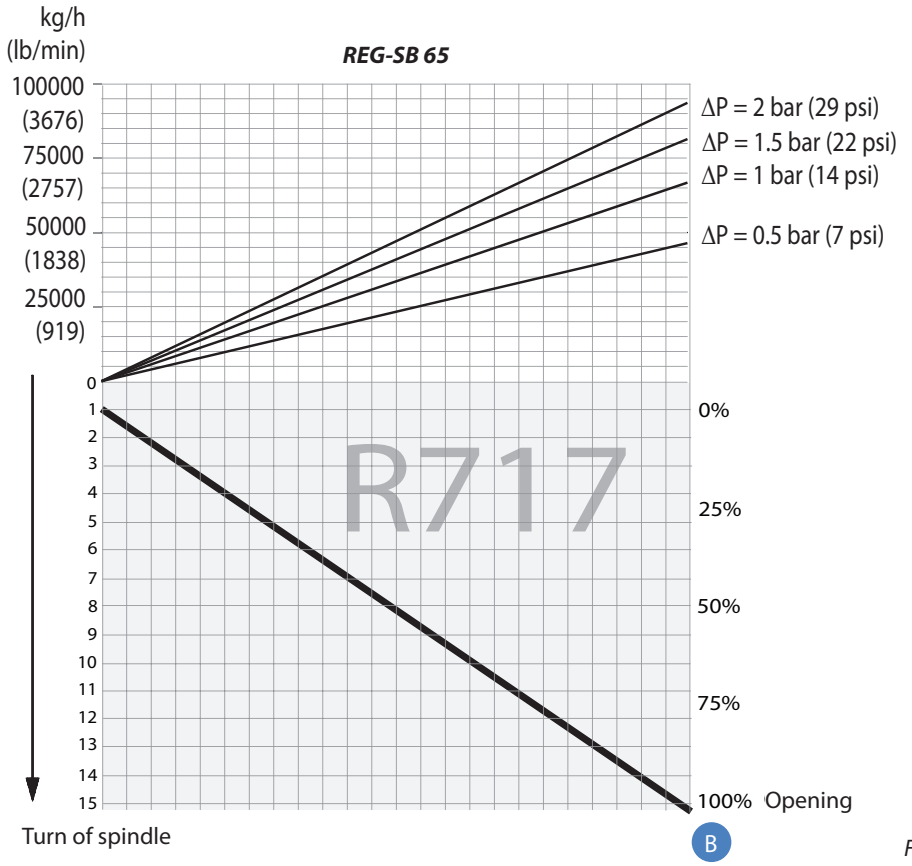

Fig. 8

For choice of valve size and connection see "Connections".

Computation and selection
(Continued)

Liquid R 717, density: 670 kg/m³ [42 lb/ft³]

Calculation factor C_A

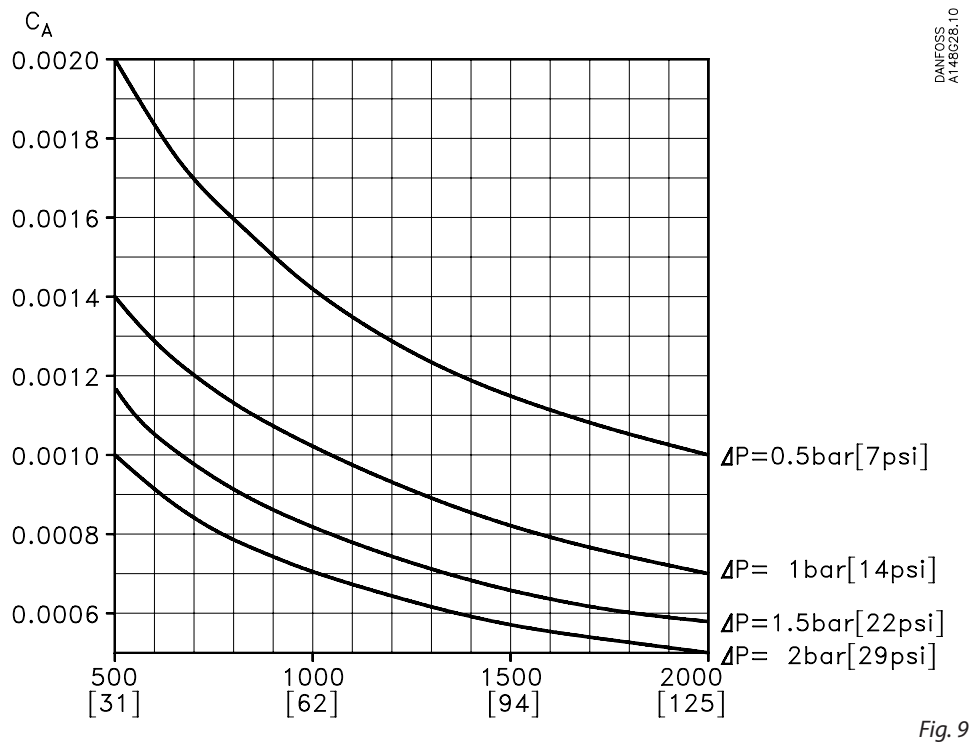

Fig. 9

For choice of valve size and connection see "Connections".

© Danfoss | DCS (mwa) | 2018.11

Computation and selection
Example 1.

Refrigerant:	R 717
Refrigerant flow:	2200 kg/h
Pressure drop:	Δp = 0.5 bar

The above mentioned example is illustrated on the following flow rate diagram and shows that REG-SB 15 and 20 with cone B can be used. The main rule is that nominal regulation range should be below 85% opening degree. If the arrowline is crossing 2 cone curves, the smaller cone should be selected if opening degree < 85%.

The example is only correct if the density of the refrigerant is approx. 670 (kg/m³), and there must be no build-up of flash gas in the valve.

Flow rate diagram

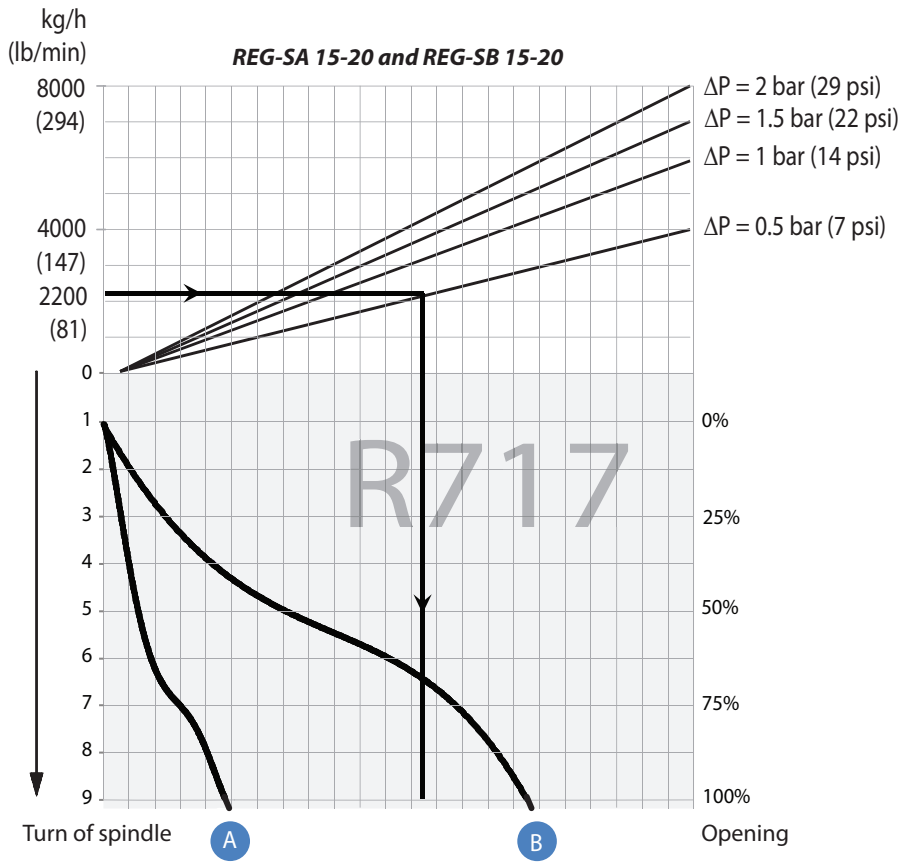

Fig. 10

Computation and selection
Example 2.

Brine, density	ρ:	1150	[kg/m³]
Brine flow	G:	2,700	[kg/h]
Pressure drop	Δp:	0.5	[bar]

In this example it is not possible to use the selection diagrams (fig. 5 - 8) as the refrigerant in question is not included.

Use the curves of the k_v-values instead (fig. 1 - 4) and calculate the required k_v by means of the formulas in the "Introduction" passage at the beginning of this chapter. Alternatively calculate the k_v-values by means of the calculation factor C_A (fig. 11) and the flow rate diagram (in this example: fig. 12) as per the following calculation example.

Calculation example:

Required k_v-value
C_A = 0.00132 (from fig. 18)
k_v = $C_A \times G$
k_v = 0.00132 × 2,700 [kg/h]
= 3.56 [m³/h]

Calculation factor C_A

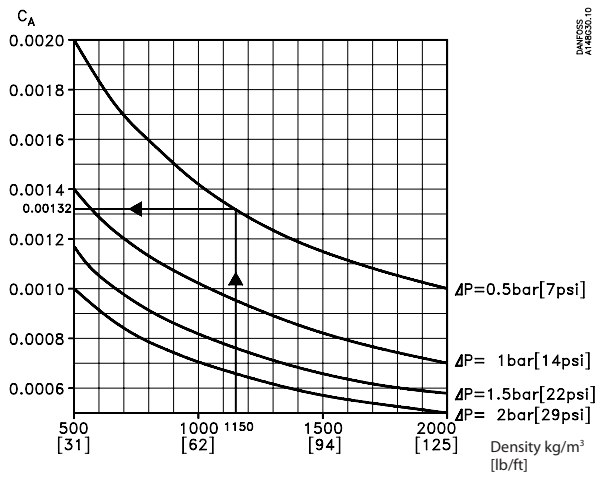

Fig. 11

Flow rate diagram

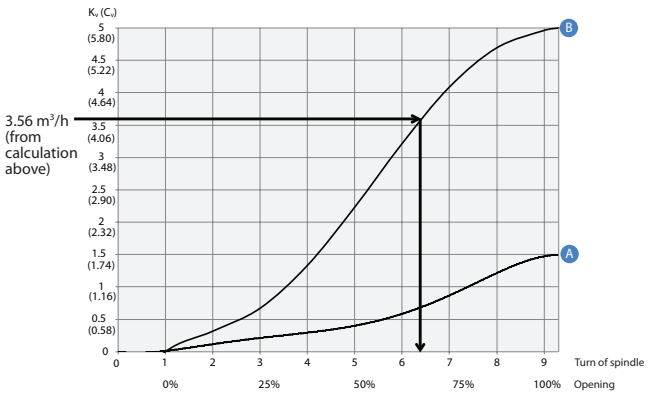

Fig. 12

REG-SB 15 and REG-SB 20 with cone B can be used.

© Danfoss | DCS (mwa) | 2018.11

Material specification

REG-SA and REG-SB 10

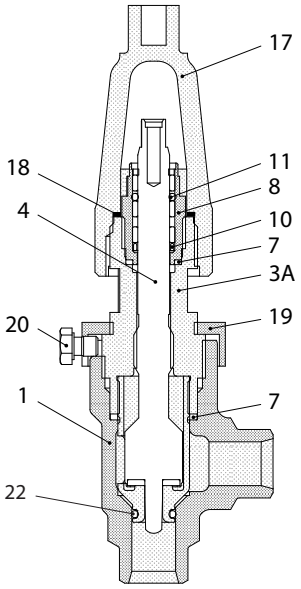

REG-SA and REG-SB 15 - 40

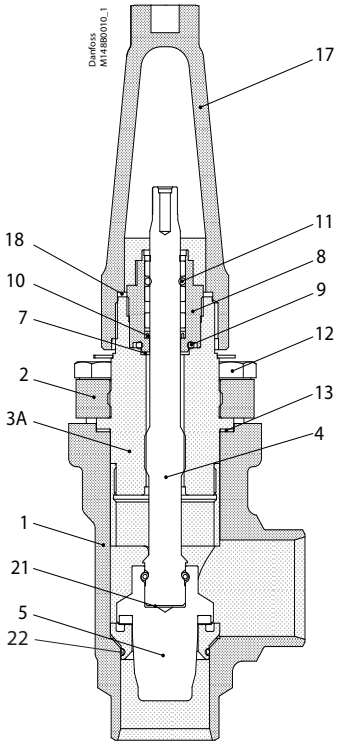

REG-SB 50 - 65

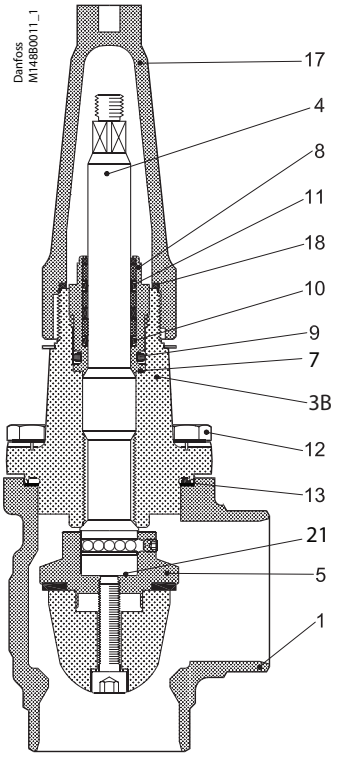

No.	Part	Material	EN	ISO	ASTM
1	Housing	Steel	G20Mn5QT, 10213-3 ---------- P285QH+QT, 10222-4		LCC, A352 ---------- LF2, A350
2	DN 15 - 40 (½ - 1½ in.) – Bonnet, Flange	Steel	P275NL1 or 2 EN10028-3		A, A662
3A	DN 15 - 40 ($^3/_8$ - 1½ in.) – Bonnet, Insert	Steel	11SMn30 10087	Type 2, R 683-9	1213 SAE J403
3B	DN 50 - 65 (2 - 2½ in.) – Bonnet, Flange	Steel	P285QH+QT 10222-4		LF2 A350
4	Spindle DN 15 - 65 (¼ - 2½ in.)	Stainless steel	X8CrNiS 18-9, 17440	Type 17, 683/13	AISI 303
5	Cone	Steel			
7	Packing washer	Aluminium			
8	Packing gland	Stainless Steel	X8CrNiS 18-9, 10088	Type 17, 683/13	AISI 303
9	O-ring	Cloroprene (Neoprene)			
10	Spring loaded Teflon ring	PTFE			
11	O-ring	Cloroprene (Neoprene)			
12	Bolts	High temperature steel	42CrMo5 10269		A193
13	Gasket	Fiber, non asbestos			
14	Bottom insert	Steel			
17	Seal cap	Aluminium			
18	Gasket f. seal cap	Nylon			
19	Locking nut	Steel			
20	Screw	Steel			
21	Disk spring	Steel			
22	O-ring	Cloroprene (Neoprene)*			

*To be replaced in R717 Heat Pump and R1270 Propylene applications.

Dimensions and weights

REG-SA and REG-SB 15 - 65 in angleway version

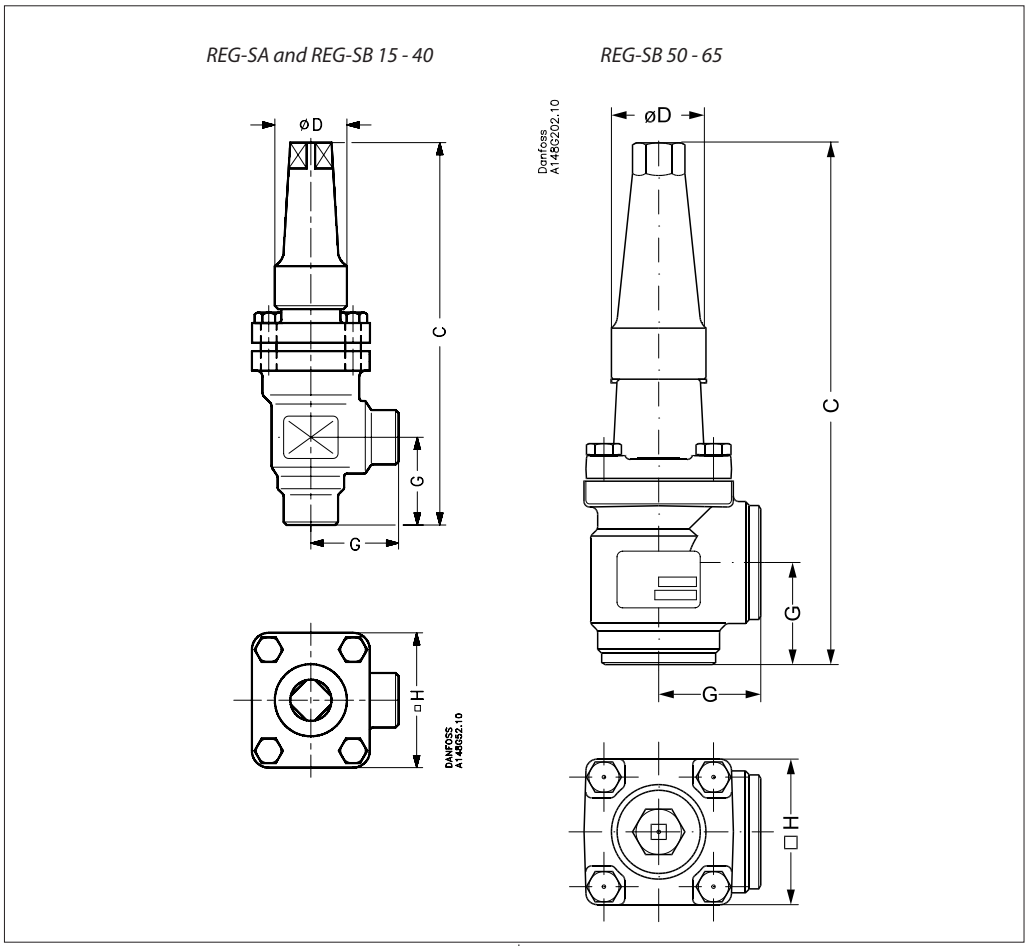

Valve size			C		G		∅D		□H		Weight
REG-SA/SB 15-20	mm		182		45		38		60		1.4 kg
REG-SA/SB (½-³/₄)	in.		7.17		1.77		1.50		2.36		3.1 lb
REG-SA/SB 25-40	mm		237		55		50		70		2.4 kg
REG-SA/SB (1-1½)	in.		9.33		2.17		1.97		2.76		5.3 lb
REG-SB 50	mm		315		60		50		77		3.2 kg
REG-SB (2 in.)	in.		12.4		2.36		1.97		3.03		7.1 lb
REG-SB 65	mm		335		70		50		90		4.8 kg
REG-SB (2½ in.)	in.		13.19		2.76		1.97		3.54		10.6 lb

Specified weights are approximate values only.

© Danfoss | DCS (mwa) | 2018.11

Dimensions and weights
(Continued.)

REG-SA and REG-SB 15 - 65 in straightway version

REG-SA and REG-SB 15 - 40

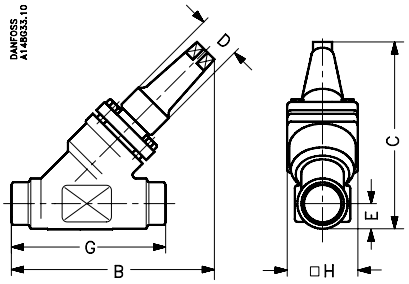

REG-SB 50-65

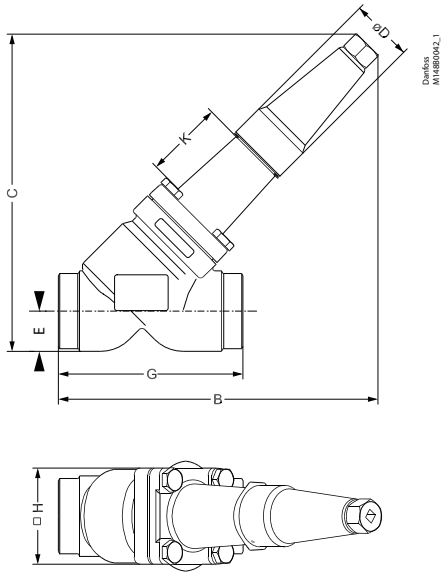

Valve size		C	B	E	G		∅D		□H		Weight
REG-SA/SB 15-20	mm	145	155	20	120		38		60		2.0 kg
REG-SA/SB (½-³/₄)	in.	5.71	6.10	0.79	4.72		1.50		2.36		4.4 lb
REG-SA/SB 25-40	mm	200	215	26	155		50		70		3.0 kg
REG-SA/SB (1-1½)	in.	7.87	8.46	1.02	6.10		1.97		2.76		6.6 lb
REG-SB 50	mm	257	250	32	148		50		77		4.2 kg
REG-SB (2 in.)	in.	10.12	10.20	1.26	5.83		1.97		3.03		9.3 lb
REG-SB 65	mm	280	284	40	176		50		90		6.3 kg
REG-SB (2½ in.)	in.	11.02	11.18	1.57	6.93		1.97		3.54		13.9 lb

Specified weights are approximate values only.

Connections

DIN

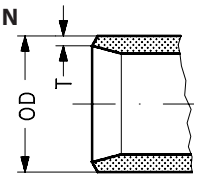

Size mm	Size in.	OD mm	T mm	OD in.	T in.			k_v-angle m^3/h	k_v-straight m^3/h	C_v-angle USgal/min	C_v-straight USgal/min
Butt-weld DIN (EN 10220)											
10	3/8	17.2	2.3	0.677	0.091			4.5	3.2	5.2	3.6
15	½	21.3	2.3	0.839	0.091			7.0	4.9	8.1	5.7
20	¾	26.9	2.3	1.059	0.091			14.6	10.2	16.9	11.8
25	1	33.7	2.6	1.327	0.103			24.8	17.4	28.8	20.2
32	1¼	42.4	2.6	1.669	0.102			42.6	29.8	49.4	34.6
40	1½	48.3	2.6	1.902	0.103			45.2	31.6	52.4	36.7
50	2	60.3	2.9	2.37	0.11			80	65	93	76
65	2½	76.1	2.9	3	0.11			120	97	140	113

ANSI

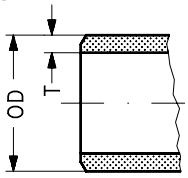

Size mm	Size in.	OD mm	T mm	OD in.	T in.			k_v-angle m^3/h	k_v-straight m^3/h	C_v-angle USgal/min	C_v-straight USgal/min
Butt-weld ANSI (B 36.10 Schedule 80)											
10	3/8	17.2	3.2	0.677	0.126			4.5	3.15	5.2	3.6
15	½	21.3	3.7	0.839	0.146			7.0	4.9	8.1	5.7
20	¾	26.9	4.0	1.059	0.158			14.6	10.2	16.9	11.8
25	1	33.7	4.6	1.327	0.181			24.8	17.4	28.8	20.2
32	1¼	42.4	4.9	1.669	0.193			42.6	29.8	49.4	34.6
40	1½	48.3	5.1	1.902	0.201			45.2	31.6	52.4	36.7
Butt-weld ANSI (B 36.10 Schedule 40)											
50	2	60.3	3.9	2.37	0.15			80	65	93	76
65	2½	73.0	5.2	2.87	0.20			120	97	140	113

Ordering

Size [DN]	Parts Program					
	Housing				Top complete	
	ANG		STR		REG-SA	REG-SB
	DIN	ANSI	DIN	ANSI		
6						
10	148B6690	148B6688	148B6694	148B6692	148B5761	148B5764
15	148B6622	148B6612	148B6642	148B6632	148B5762	148B5765
20	148B6623	148B6613	148B6643	148B6633	148B5762	148B5765
25	148B6624	148B6614	148B6644	148B6634	148B5763	148B5766
32	148B6625	148B6615	148B6645	148B6635	148B5763	148B5766
40	148B6626	148B6616	148B6646	148B6636	148B5763	148B5766
50	148B6627	148B6617	148B6647	148B6637		148B5767
65	148B6628	148B6618	148B6648	148B6638		148B5768
80						
100						
125						
150						
200						

Size [DN]	Service kit*	
	O-ring kit for	
	R717 Heat Pump	R1270 Propylene
6		
10	148B6084	148B6085
15	148B6070	148B6077
20	148B6070	148B6077
25	148B6071	148B6078
32	148B6071	148B6078
40	148B6071	148B6078
50		
65		
80		
100		
125		
150		
200		

© Danfoss | DCS (mwa) | 2018.11

ENGINEERING
TOMORROW

Hand-operated regulating valves in stainless steel

Types REG-SA SS and REG-SB SS

Contents **Page**

Features 105
Pressure and temperature range 105
Design 106
Technical data 106
Connections 106
Computation and selection 107
Material specification 113
Dimensions and weights 114
Ordering 115

AI234986440271en-000502 | 2018.11

ENGINEERING
TOMORROW

Hand-operated regulating valves in stainless steel

Types REG-SA SS and REG-SB SS

In certain specific areas such as outdoor applications and corrosive atmospheres, such as coastal installations, there is a need for high surface protection to prevent failure due to corrosion.

Today's food safety standards often call for daily treatment with detergents to protect against bacteria growth, again producing a need for high surface protection.

REG-SA SS and REG-SB SS are angle-way and straight-way hand-operated regulating valves, which act as normal stop valves in closed position.

The valves are designed to meet the strict quality requirements on refrigerating installations specified by the international classification societies and are carefully designed to present favourable flow conditions and accurate linear characteristics.

The valves are equipped with vented cap and have internal backseating enabling the spindle seal to be replaced with the valve still under pressure.

Features

- Applicable to HCFC, HFC, R717 (Ammonia), R744 (CO_2), Propane, Butane, Iso-Butane and Ethane.
  R717 Heat Pump and Propylene applications with replaced O-ring.
- Designed to give favourable flow conditions.
- Internal backseating enables replacement of the spindle seal whilst the valve is active, i.e. under pressure
- Housing is made of special cold resistant stainless steel approved for low temperature operations.
- Easy to disassemble for inspection and service.
- Butt-weld DIN and ANSI connections.
- Max. operating pressure:
  52 bar g (754 psig)
- Temperature range:
  –60/+150°C (–76 +302°F).
- Compact and light valves for easy handling and installation.
- Classification: DNV, CRN, BV, EAC etc.
  To get an updated list of certification on the products please contact your local Danfoss Sales Company.

Pressure and temperature range

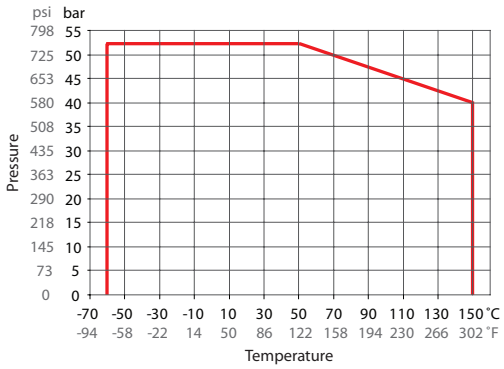

REG-SA SS/REG-SB SS DN15-DN40

Design

Housing
Made of stainless steel approved for low temperature operations.

Connections
Available with the following connections:

- Butt-weld DIN (EN 10220)
  DN 15 - 40 (½ - 1½ in.)
- Butt-weld ANSI (B 36.19M)
  DN 15 - 40 (½ - 1½ in.)

The cone
The valves are available in two different versions – REG-SA SS with an A cone and REG-SB SS with a B cone. The A cone is designed for expansion lines, while the B cone is designed for regulating purposes e.g. liquid lines.

The valve cone is designed to ensure perfect regulation and provide an extensive regulating area. Irrespective of the refrigerant used, it is easy to obtain the correct capacity. A cone seal ring provides perfect sealing at a minimum closing momentum.

The valve cone can be turned on the spindle, thus there will be no friction between the cone and the seat when the valve is opened and closed.

Made of polished stainless steel, ideal for O-ring sealing. Furthermore, parts of the spindle are heat treated to obtain anti-abrasive/adhesive properties.

Packing gland - REG-SA SS and REG-SB SS
The stainless steel packing gland comprises a spring loaded seal packing gland which ensures a perfect tightness in the range: –60/+150°C (–76/+302°F).

The packing glands are equipped with a scraper ring to prevent penetration of dirt and ice into the packing gland.

Installation
Install the valve with the spindle up or in horizontal position. The flow must be directed towards the cone.

The valve is designed to withstand high internal pressure. However, the piping system in general should be designed to avoid liquid traps and reduce the risk of hydraulic pressure caused by thermal expansion.

For further information refer to product instruction for REG-SA SS and REG-SB SS.

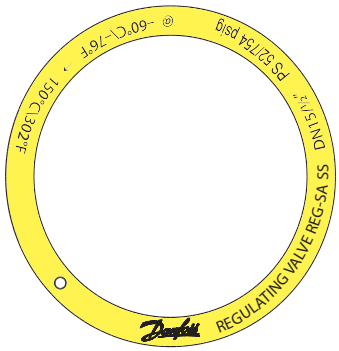

Example of marking ring, REG-SA SS

Pressure Equipment Directive (PED)
REG-SA/SB SS valves are approved according to the European standard specified in the Pressure Equipment Directive and are CE marked.

REG-SA SS and REG-SB SS valves		
Nominal bore	DN = < 25 mm (1 in.)	DN32-40 mm (1¼ - 1½ in.)
Classified for	Fluid group I	
Category	Article 3, paragraph 3	II

Technical data

- *Refrigerants*
  Applicable to HCFC, HFC, R717 (Ammonia), R744 (CO_2), Propane, Butane, Iso-Butane and Ethane. R717 Heat Pump and Propylene applications with replaced O-ring.

  For further information please contact your local Danfoss Sales Company.
- *Temperature range*
  –60/+150°C (–76/+302°F)
- *Max working pressure*
  52 bar g (754 psi g)
- *Flow coefficients*
  Flow coefficients for fully opened valves from k_v = 0.15 to 80 m³/h (C_v = 0.17 to 92.5 USgal/min).

Connections

DIN

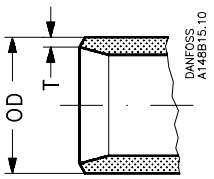

ANSI

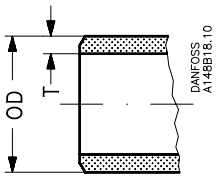

Size		OD	T
Butt-weld DIN (EN 10220)			
15	mm	21.3	2.3
½	in.	0.839	0.091
20	mm	26.9	2.3
¾	in	1.059	0.091
25	mm	33.7	2.6
1	in.	1.327	0.103
32	mm	42.4	2.6
1¼	in.	1.669	0.102
40	mm	48.3	2.6
1½	in.	1.902	0.103

Size		OD	T
Butt-weld ANSI (B 36.19M, SCHEDULE 40)			
15	mm	21.3	2.8
½	in.	0.839	0.11
20	mm	26.9	2.9
¾	in	1.06	0.11
25	mm	33.7	3.5
1	in.	1.33	0.14
32	mm	42.4	3.6
1¼	in.	1.67	0.14
40	mm	48.3	3.7
1½	in.	1.9	0.15

© Danfoss | DCS (mwa) | 2018.11

Computation and selection

Introduction
In refrigeration plants, regulating valves are primarily used in liquid lines in order to regulate the flow of refrigerant. The valves can, however, also be used as expansion valves. From a calculation point of view the two fields of application are very different.

Normal flow is the term used to describe the general case where the flow through the valve is proportional to the square root of the pressure drop across it and inversely proportional to the density of the refrigerant (Bernouillis equation).

This relationship between mass flow, pressure drop and density satisfies the majority of all valve applications with refrigerants and brines.

Normal flow is characterised by turbulent flow through the valve without any phase change. The following capacity curves are based on the above mentioned assumption.

Application of the regulating valves outside the normal flow area will reduce the capacity of the valve considerably. In such cases it is recommended to use "DIRcalc™" (Danfoss Industrial Refrigeration calculation programme).

Location of valve in system (marked with grey)

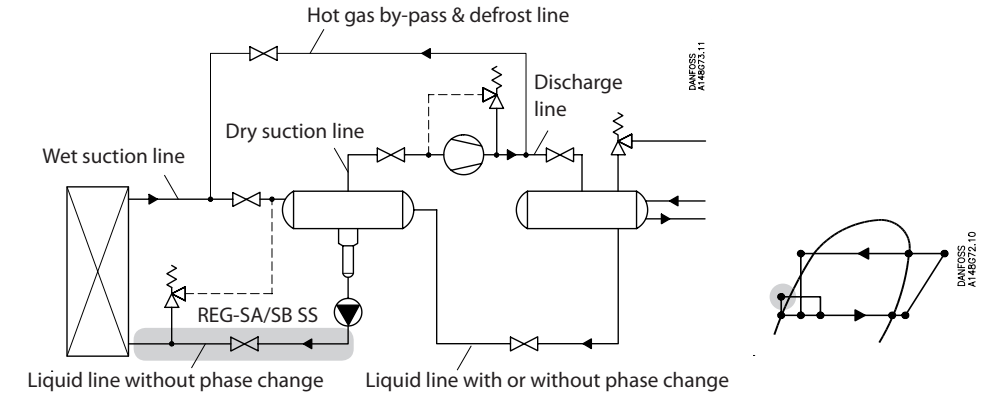

Sizing regulating valve for liquid flow
Liquid refrigerants: Use the liquid tables, fig. 6 - 10. For other refrigerants and brines, "Normal flow" (Turbulent flow); see below and use the flow coefficient tables (fig. 1 - 2).

SI-units

Mass flow:

$$k_v = \frac{G}{\sqrt{\rho \times 1000 \times \Delta p}} = G \times C_A \, [m^3/h]$$

Volume flow:

$$k_v = \frac{\dot{V}}{\sqrt{\frac{1000 \times \Delta p}{\rho}}} \, [m^3/h]$$

Imperial units

Mass flow:

$$C_v = \frac{0.95 \times G}{\sqrt{\rho \times \Delta p}} = 31.6 \times G \times C_A \, [USgal/min.]$$

Volume flow:

$$C_v = \frac{0.127 \times \dot{V}}{\sqrt{\frac{\Delta p}{\rho}}} \, [USgal/min.]$$

k_v	[m³/h]	Quantity [m³/h] of water flowing through a valve at a pressure loss of 1 bar (according to VDE/VDI Norm 2173).
P_1	[bar]	Pressure before the valve (upstream).
P_2	[bar]	Pressure after the valve (downstream).
Δp	[bar]	Actual pressure loss across the valve (P_1–P_2).
G	[kg/h]	Mass flow through the valve.
$\dot{V}$	[m³/h]	Volume flow through the valve.
ρ	[kg/m³]	Density of the refrigerant before the valve.
C_A		Calculation factor (fig. 5).

C_v	[US gal/min]	Quantity [US gal/min] of water flowing through a valve at a pressure loss of 1 psi.
P_1	[psi]	Pressure before the valve (upstream).
P_2	[psi]	Pressure after the valve (downstream).
Δp	[psi]	Actual pressure loss across the valve (P_1–P_2).
G	[lb/min]	Mass flow through the valve.
$\dot{V}$	[US gal/min]	Volume flow through the valve.
ρ	[lb/ft³]	Density of the refrigerant before the valve
C_A		Calculation factor (fig. 5).

Computation and selection *(Continued)*

Flow coefficient

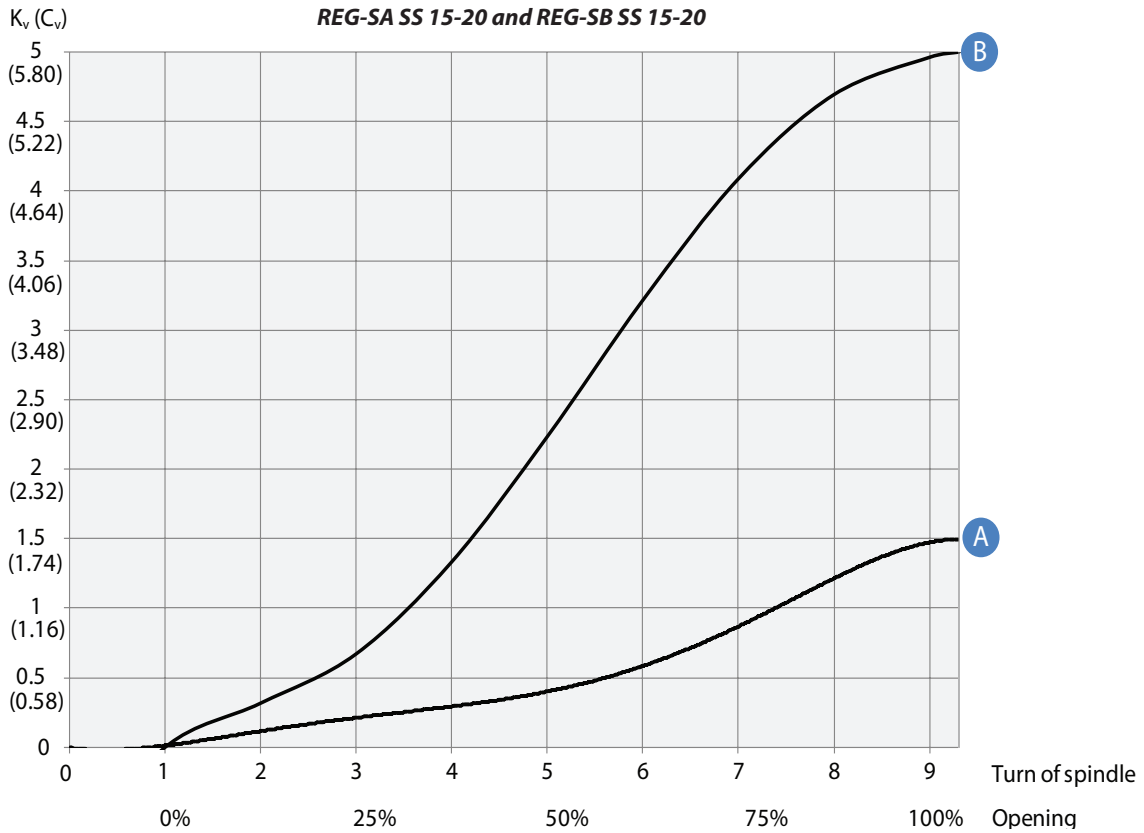

Fig. 1

Flow coefficient

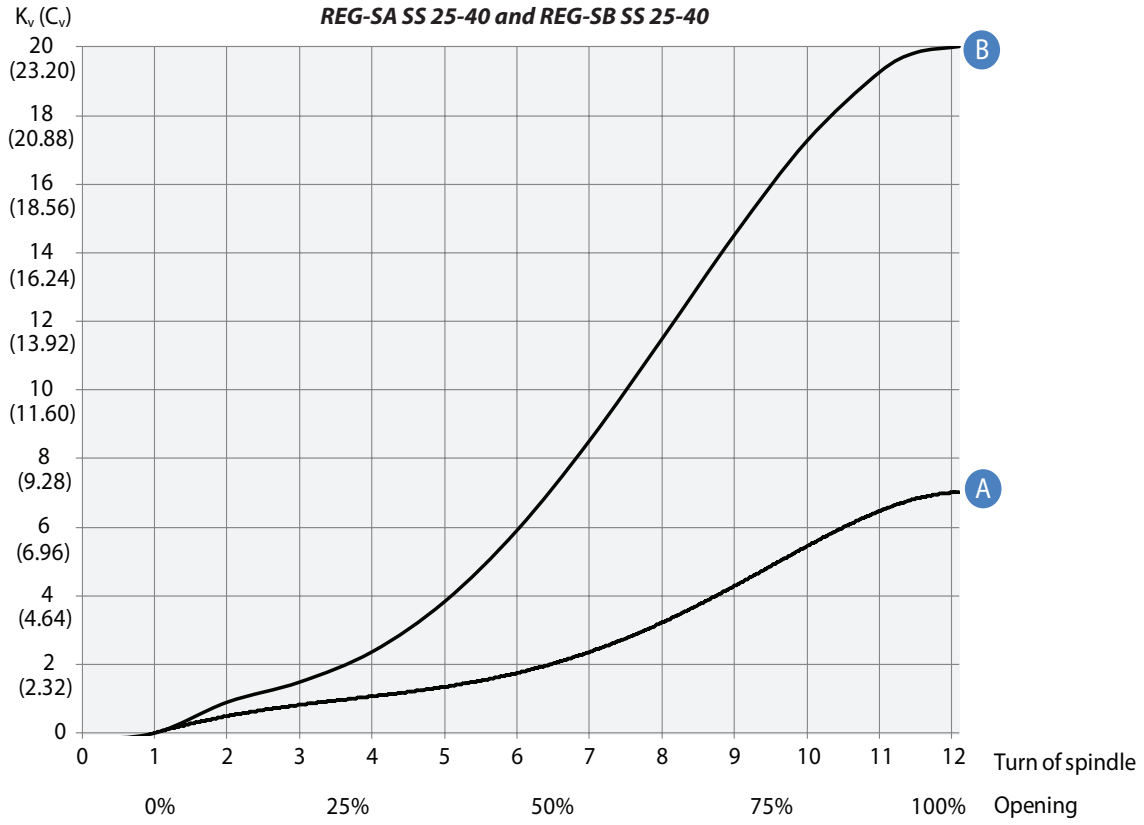

Fig. 2

© Danfoss | DCS (mwa) | 2018.11

Computation and selection
(Continued)

Liquid R 717, density: 670 kg/m³ [42 lb/ft³]

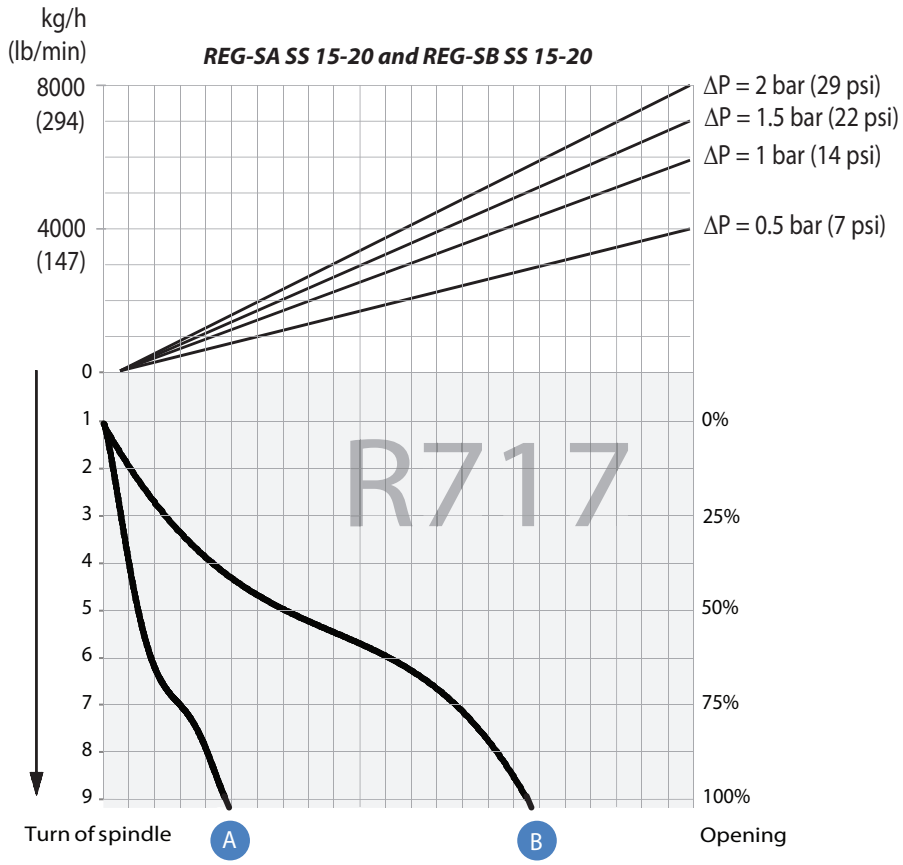

Fig. 3

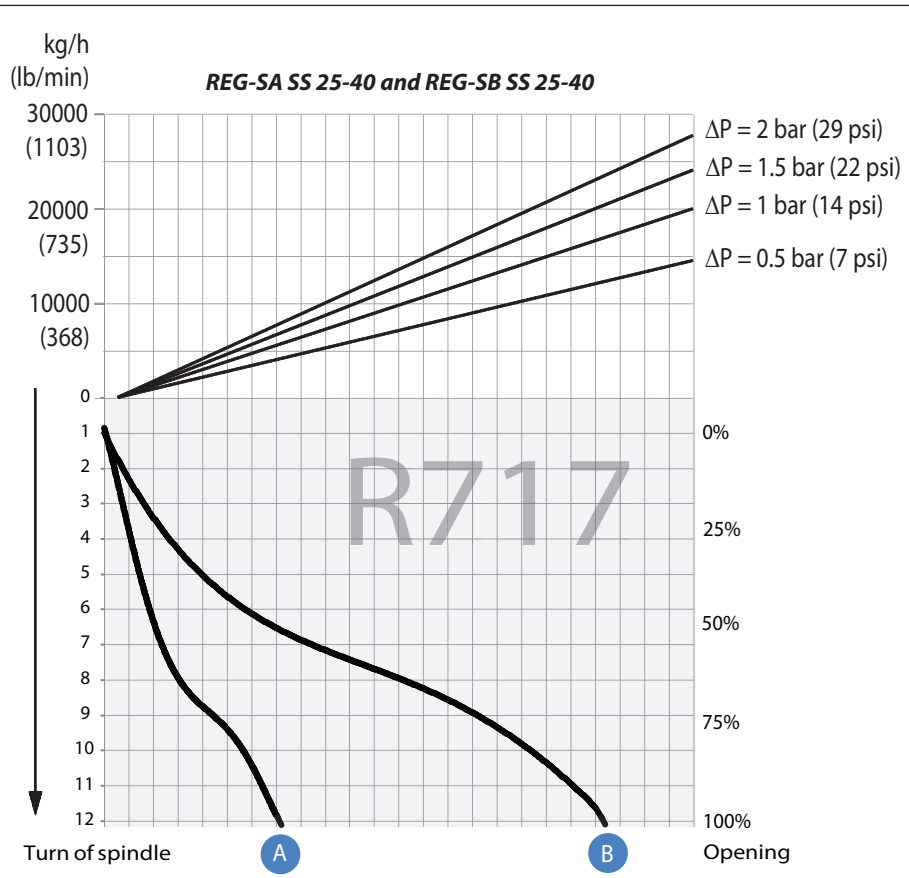

Fig. 4

For choice of valve size and connection see "Connections".

Computation and selection
(Continued)

Calculation factor C_A

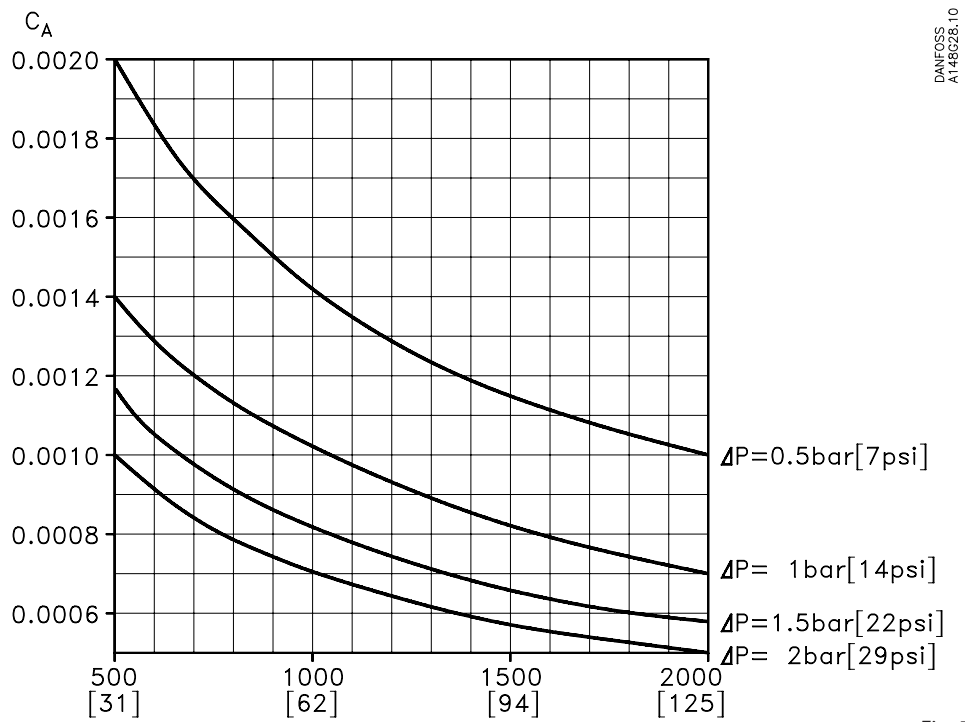

Fig. 5

For choice of valve size and connection see "Connections".

© Danfoss | DCS (mwa) | 2018.11

Computation and selection
Example 1.

Refrigerant: R 717
Refrigerant flow: 2200 kg/h
Pressure drop: Δp = 0.5 bar

The above mentioned example is illustrated on the following flow rate diagram and shows that REG-SB SS 15 and 20 with cone B can be used. The main rule is that nominal regulation range should be below 85% opening degree. If the arrowline is crossing 2 cone curves, the smaller cone should be selected if opening degree < 85%.

The example is only correct if the density of the refrigerant is approx. 670 (kg/m³), and there must be no build-up of flash gas in the valve.

Flow rate diagram

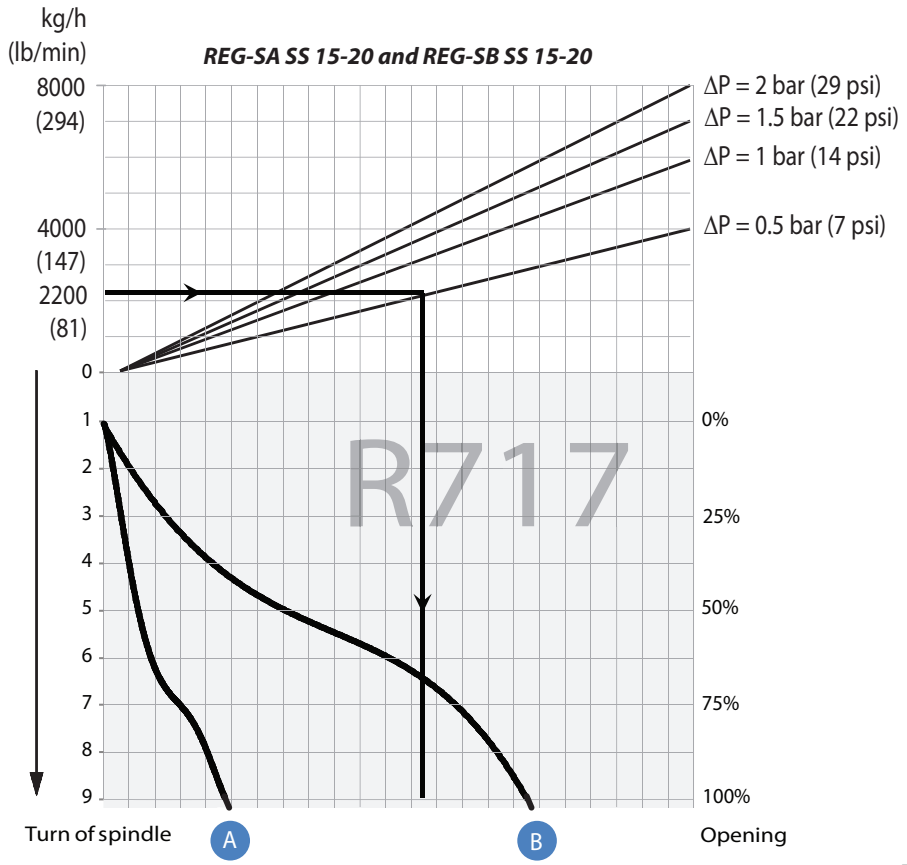

Fig. 6

Computation and selection
Example 2.

Brine, density	ρ:	1150	[kg/m³]
Brine flow	G:	2,700	[kg/h]
Pressure drop	Δp:	0.5	[bar]

In this example it is not possible to use the selection diagrams (fig. 3 and 4) as the refrigerant in question is not included.

Use the curves of the k_v-values instead (fig. 1 - 2) and calculate the required k_v by means of the formulas in the "Introduction" passage at the beginning of this chapter. Alternatively calculate the k_v-values by means of the calculation factor C_A (fig. 7) and the flow rate diagram (in this example: fig. 8) as per the following calculation example.

Calculation example:

Required k_v-value
C_A = 0.00132 (from fig. 18)
k_v = $C_A \times G$
k_v = 0.00132 × 2,700 [kg/h]
= 3.56 [m³/h]

Calculation factor C_A

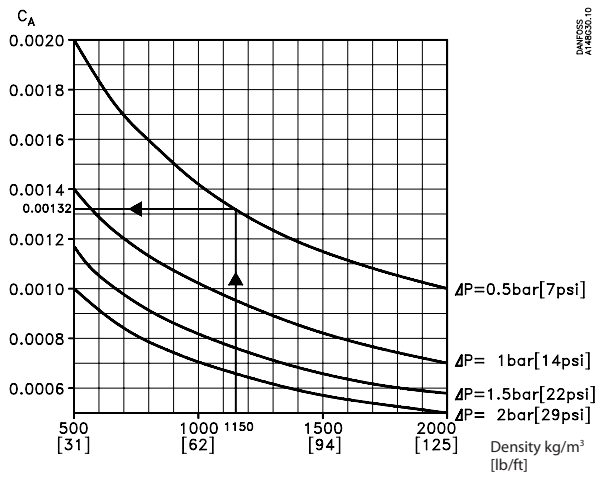

Fig. 7

Flow rate diagram

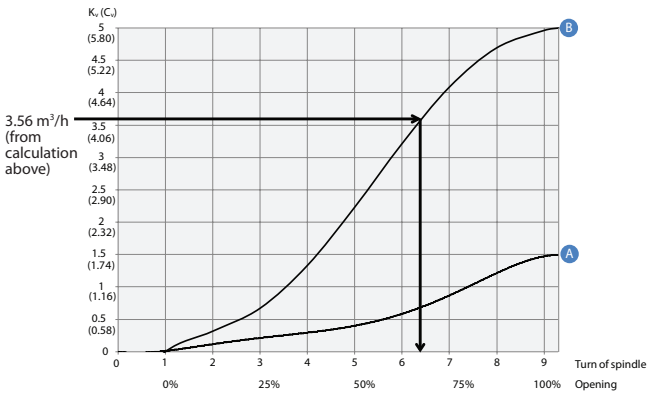

Fig. 8

REG-SB SS 15 and REG-SB SS 20 with cone B can be used.

© Danfoss | DCS (mwa) | 2018.11

Material specification

REG-SA SS and REG-SB SS 15 - 40

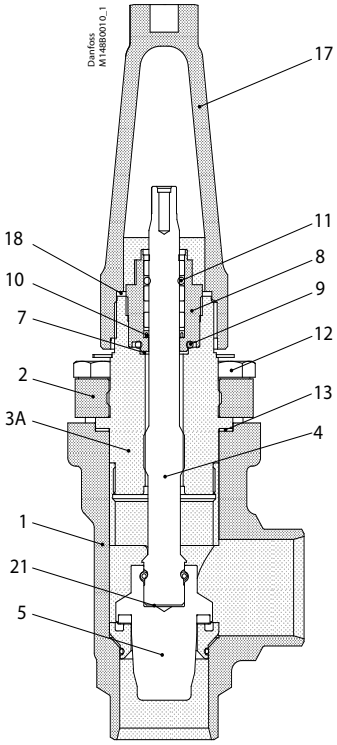

No.	Part	Material	EN	ISO	ASTM
1	Housing	Stainless steel	GX5CrNi19-10 EN10213-4		AISI 304
2	Bonnet, Flange	Stainless steel	X5CrNi18-10 EN10088		AISI 304
3A	Bonnet, Insert	Stainless steel	X8CrNiS18-9 DIN 17440		AISI 303
4	Spindle	Stainless steel	X8CrNiS 18-9, DIN 17440	Type 17, 683/13	AISI 303
5	Cone	Steel			
7	Packing washer	Aluminium			
8	Packing gland	Stainless Steel	X8CrNiS 18-9, 10088	Type 17, 683/13	AISI 303
9	O-ring	Cloroprene (Neoprene)			
10	Spring loaded Teflon ring	PTFE			
11	O-ring	Cloroprene (Neoprene)			
12	Bolts	Stainless steel	A2-70	A2-70	Type 308
13	Gasket	Fiber, non asbestos			
14	Bottom insert	Steel			
17	Seal cap	Aluminium			
18	Gasket f. seal cap	Nylon			
19	Locking nut	Steel			
20	Screw	Steel			
21	Disk spring	Steel			

Dimensions and weights

REG-SA SS and REG-SB SS 15 - 40 in angleway version

REG-SA SS and REG-SB SS 15 - 40

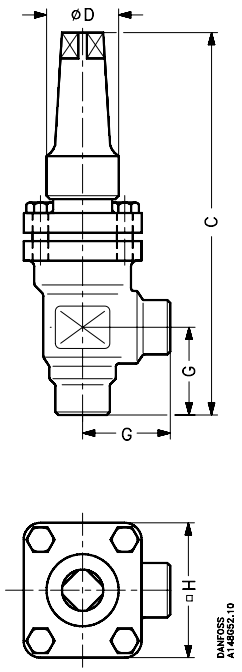

Valve size			C		G		ØD		□H		Weight
REG-SA SS/SB SS 15-20	[mm]		182		45		38		60		1.4 kg
REG-SA SS/SB SS (½-¾)	[in]		7.17		1.77		1.50		2.36		3.1 lb
REG-SA SS/SB SS 25-40	[mm]		237		55		50		70		2.4 kg
REG-SA SS/SB SS (1-1 ½)	[in]		9.33		2.17		1.97		2.76		5.3 lb

Specified weights are approximate values only.

REG-SA SS and REG-SB SS 10 - 65 in straightway version

REG-SA SS and REG-SB SS 15 - 40

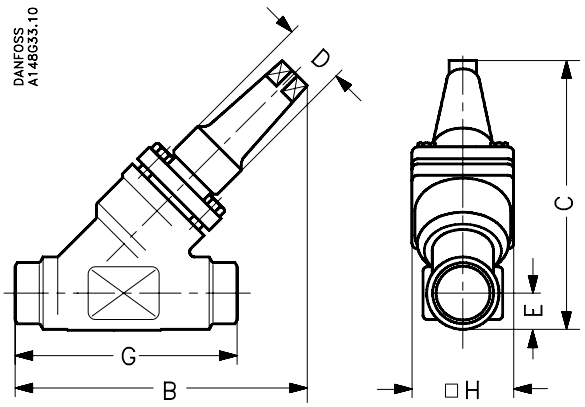

Valve size		C	B	E	G		ØD		□H		Weight
REG-SA SS/SB SS 15-20	[mm]	145	155	20	120		38		60		2.0 kg
REG-SA SS/SB SS (½-¾)	[in]	5.71	6.10	0.79	4.72		1.50		2.36		4.4 lb
REG-SA SS/SB SS 25-40	[mm]	200	215	26	155		50		70		3.0 kg
REG-SA SS/SB SS (1-1 ½)	[in]	7.87	8.46	1.02	6.10		1.97		2.76		6.6 lb

Specified weights are approximate values only.

© Danfoss | DCS (mwa) | 2018.11

Ordering

How to order
The table below is used to indentify the valve required.

Please note that the type codes only serve to identify the valves, some of which may not form part of the standard product range. For further information please contact your local Danfoss Sales Company.

Type codes

Valve type	**REG SA SS** **REG-SB SS**	Regulating Valves		
Nominal size in mm (Valve size measured on the connection diameter)			Available connection types	
			D	A
	15	DN 15	x	x
	20	DN 20	x	x
	25	DN 25	x	x
	32	DN 32	x	x
	40	DN 40	x	x
Connections	**D**	Butt-weld connection: DIN EN 10220		
	A	Butt-weld connection: ANSI B 36.19M		
Valve housing	**ANG**	Angle flow		
	STR	Straight flow		
Cone A	Size:	Flow area [mm²]		
	DN 15	36.5		
	DN 20	36.5		
	DN 25	178		
	DN 32	178		
	DN 40	178		
Cone B	Size:	Flow area [mm²]		
	DN 15	115		
	DN 20	115		
	DN 25	531		
	DN 32	531		
	DN 40	531		

Complete REG-SA SS (Cone type A)

Example:
REG-SA SS (Cone B) 15 DIN angleway = **148B5387**

Important!
Where products need to be certified according to specific certification societies or where higher pressures are required, the relevant information should be included at the time of order.

D = Butt-weld DIN
A = Butt-weld ANSI
ANG = Angleway
STR = Straightway

Butt-weld DIN (EN 10220)

Size mm	Size in.	Type	Code no.
Angleway *- REG-SA SS with cone type A*			
15	½	REG-SA SS 15 D ANG	**148B5297**
20	¾	REG-SA SS 20 D ANG	**148B5385**
25	1	REG-SA SS 25 D ANG	**148B5494**
32	1¼	REG-SA SS 32 D ANG	**148B5589**
40	1½	REG-SA SS 40 D ANG	**148B5674**

Butt-weld DIN (EN 10220)

Size mm	Size in.	Type	Code no.
Straightway *- REG-SA SS with cone type A*			
15	½	REG-SA SS 15 D STR	**148B5298**
20	¾	REG-SA SS 20 D STR	**148B5386**
25	1	REG-SA SS 25 D STR	**148B5495**
32	1¼	REG-SA SS 32 D STR	**148B5590**
40	1½	REG-SA SS 40 D STR	**148B5675**

Butt-weld ANSI (B 36.19M SCHEDULE 40)

Size mm	Size in.	Type	Code no.
Angleway *- REG-SA SS with cone type A*			
15	½	REG-SA SS 15 A40 ANG	**148B6482**
25	1	REG-SA SS 25 A40 ANG	**148B6483**
32	1¼	REG-SA SS 32 A40 ANG	**148B6484**

Butt-weld ANSI (B 36.19M SCHEDULE 40)

Size mm	Size in.	Type	Code no.
Straightway *- REG-SA SS with cone type A*			
15	½	REG-SA SS 15 A40 STR	**148B5299**
25	1	REG-SA SS 25 A40 STR	**148B6485**
32	1¼	REG-SA SS 32 A40 STR	**148B6486**

Ordering

Complete REG-SB SS (Cone type B)

Butt-weld DIN (EN 10220)

Size mm	Size in.	Type	Code no.
Angleway *- REG-SB SS with cone type B*			
15	½	REG-SB SS 15 D ANG	**148B5387**
20	¾	REG-SB SS 20 D ANG	**148B5389**
25	1	REG-SB SS 25 D ANG	**148B5496**
32	1¼	REG-SB SS 32 D ANG	**148B5591**
40	1½	REG-SB SS 40 D ANG	**148B5676**

Butt-weld DIN (EN 10220)

Size mm	Size in.	Type	Code no.
Straightway *- REG-SB SS with cone type B*			
15	½	REG-SB SS 15 D STR	**148B5388**
20	¾	REG-SB SS 20 D STR	**148B5390**
25	1	REG-SB SS 25 D STR	**148B5497**
32	1¼	REG-SB SS 32 D STR	**148B5592**
40	1½	REG-SB SS 40 D STR	**148B5677**

Butt-weld ANSI (B 36.19M SCHEDULE 40)

Size mm	Size in.	Type	Code no.
Angleway *- REG-SB SS with cone type B*			
20	¾	REG-SB SS 20 A40 ANG	**148B6487**
40	1½	REG-SB SS 40 A40 ANG	**148B5686**

Butt-weld ANSI (B 36.19M SCHEDULE 40)

Size mm	Size in.	Type	Code no.
Straightway *- REG-SB SS with cone type B*			
20	¾	REG-SB SS 20 A40 STR	**148B6488**
25	1	REG-SB SS 25 A40 STR	**148B6479**
40	1½	REG-SB SS 40 A40 STR	**148B5685**

D = Butt-weld DIN
A = Butt-weld ANSI
ANG = Angleway
STR = Straightway

Replacement kit (O-ring replacement) for R717 Ammonia Heat Pump and Propylene applications (including ID tag)*

Size mm	Size in.	O-ring kit for R717 Heat pump	O-ring kit for R1270 Propylene
10	3/8	**148B6084**	**148B6085**
15	½	**148B6070**	**148B6077**
20	¾		
25	1	**148B6071**	**148B6078**
32	1¼		
40	1½		

* Replacement kits for R717 Ammonia Heat Pump is applicable for continuous operating temperature between +100°C to 150°C (212°F to 302°F)

© Danfoss | DCS (mwa) | 2018.11

ENGINEERING
TOMORROW

Gauge valves
Type SNV-ST and SNV-SS

Contents **Page**

Features 119
Technical data 120
Design 120
Connections 121
Material specification 122
Dimensions and weights 123
Ordering 124

AI244986497087en-000808 | 2017.11

ENGINEERING
TOMORROW

Gauge valves
Type SNV-ST and SNV-SS

SNV-ST and SNV-SS valves are designed to meet all industrial refrigeration application requirements. Designed as service valves they provide favourable flow characteristics.

Features

- Applicable to HCFC, non flammable HFC, R717 (Ammonia) and R744 (CO_2).
- Suitable for "heavy duty" industrial applications having a very sturdy and safe design including high pressures and wide temperature range.
- The SNV-ST and SNV-SS valves have backseating (metal to metal).
- Compact and light valve for easy handling and installation
- No special flow direction required.
- Provide high flow characteristics.
- Each valve type is clearly marked with type and size.
- Housing and bonnet material is low temperature steel (stainless steel for SNV-SS) according to requirements of the Pressure Equipment Directive and other international classification authorities.
- Valve safety is enhanced with the spindle being secured such that it cannot be unscrewed.
- Max. operating pressure:
  52 bar g / 754 psig
  Valves for higher operating pressure available on request
- Full temperature range:
  -60 – 150 °C / -76 – 302 °F
- Classification: DNV, CRN, BV, EAC etc.
  To get an updated list of certification on the products please contact your local Danfoss Sales Company.

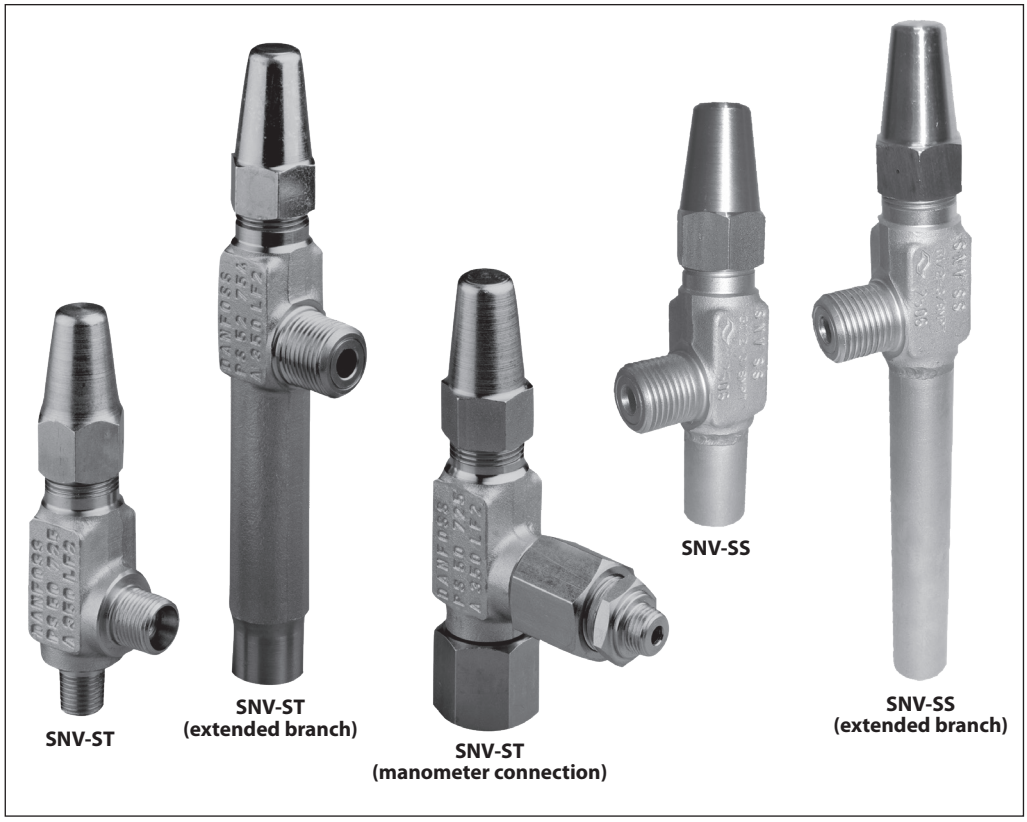

Technical data

- *Refrigerants*
  Applicable to HCFC, non flammable HFC, R717 (Ammonia) and R744 (CO_2). For further information please see installation instruction for SNV-ST.

  For further information please contact your local Danfoss Sales Company.
- *Temperature range*
  -60 – 150 °C / -76 – 302 °F.
- *Maximum working pressure*
  The valve is designed for: Maximum operating pressure of 52 bar g / 754 psig.
  Valves for higher operating pressure available on request.

Design

Connections
Available with the following connections:
- CD Cutting ring
- MPT Male NPT (ANSI/ASME B1.20.1)
- FPT Female NPT (ANSI/ASME B1.20.1)
- R Male (ISO 7-1)
- RC Female (ISO 7-1)
- G
- W Welding connection

Housing
Made of special steel, approved for low temperature operations.

Spindle
Equipped with stainless steel spindle, which is ideal for O-ring sealing.

Installation
No special flow direction is required. The valve is designed to withstand high internal pressures. However, the piping system in general should be designed to avoid liquid traps and reduce the risk of hydraulic pressure caused by thermal expansion. For further information refer to installation instruction for SNV-ST and SNV-SS.

© Danfoss | DCS (mwa) | 2018.11

Connections

CD 6
CD10

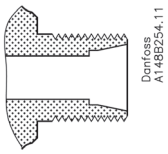

Cutting ring, DIN 3861 & DIN 3901 class L, d_u = 6 mm

Cutiing ring, DIN 3861 & DIN 3901 class L, d_u = 10 mm

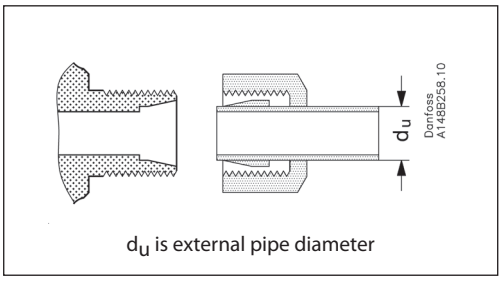

Note: Fittings not included

¼ MPT
3/8 MPT

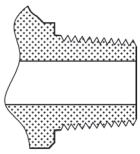

¼" male NPT ANSI/ASME B1.20.1
3/8" male NPT ANSI/ASME B1.20.1

¼ FPT
3/8 FPT

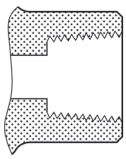

¼" female NPT ANSI/ASME B1.20.1
3/8" female NPT ANSI/ASME B1.20.1

¼ R
3/8 R

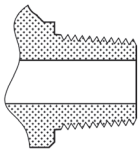

¼" male ISO 7-1
3/8" male ISO 7-1

¼ RC
3/8 RC

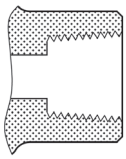

¼" female ISO 7-1
3/8" female ISO 7-1

G ½

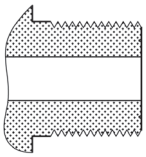

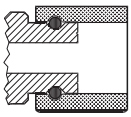

G ½"

W

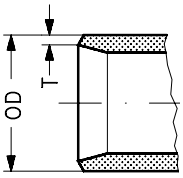

½" welding connection
OD = 21.3 mm / 0.839 in.
T = 2.3 mm / 0.091 in.

Material specification

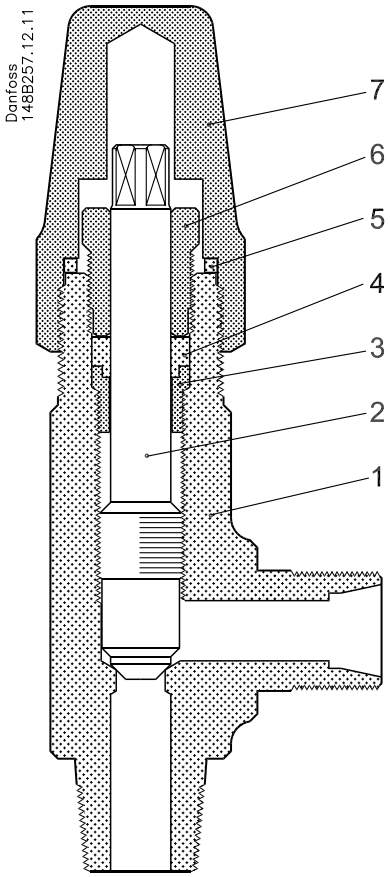

SNV-ST

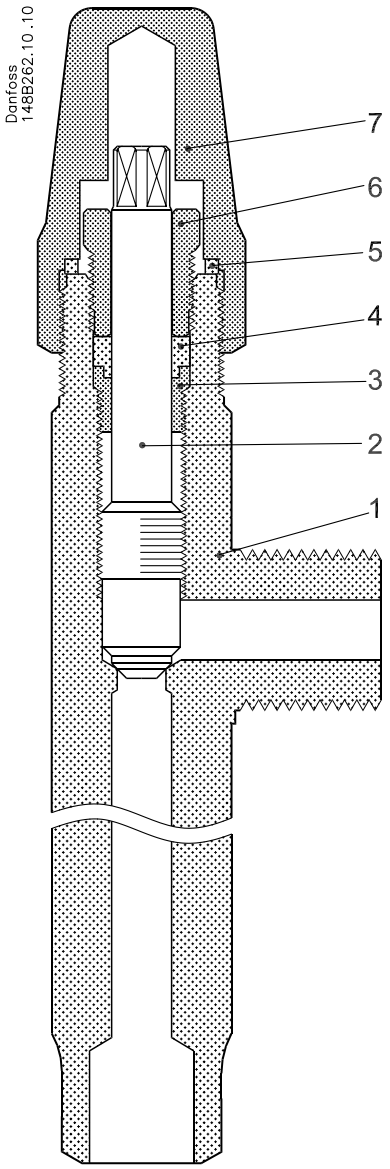

SNV-ST and SNV-SS (extended branch)

No.	Part	Material	EN	JIS	ASTM
1	Housing	Steel	P285QH EN 10222-4	SFL 2 G 3205	LF2 A350
		Stainless steel (SNV-SS)	XSCrNi18-10, 10088		AISI 304
2	Spindle	Stainless steel	X8CrNiS 18-9 EN 10088' DIN 17440 (SNV-SS only)	SUS 303	AISI 303
3	Locking ring	Steel			
4	Sealing ring	Teflon			
5	Seal cap gasket	Nylon			
6	Gland nut	Steel			
7	Seal cap	Steel			

© Danfoss | DCS (mwa) | 2018.11

Dimensions and weights

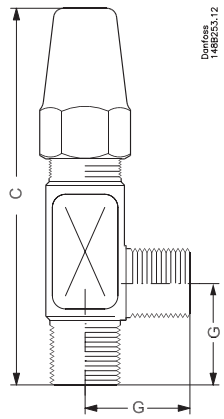

SNV-ST

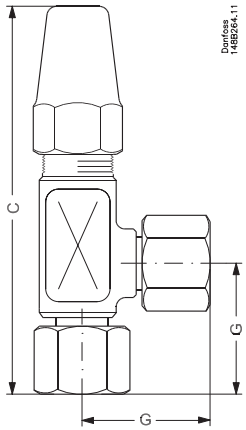

SNV-ST
(manometer conn.)

Type		C	G	Weight
SNV-ST	mm	115	32	0.36 kg
	in.	4.53	1.26	0.79 lb

Type		C	G	Weight
SNV-ST (Man.)	mm	127	45	0.56 kg
	in.	5.00	1.77	1.22 lb

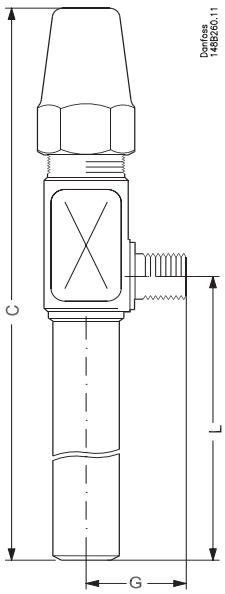

SNV-ST / SNV-SS
(extended branch)

Type		C	G	L	Weight
SNV-ST, SNV-SS Ext.branch	mm	131	32	50	0.60 kg
	in.	5.16	1.26	1.97	1.32 lb
SNV-ST Ext.branch	mm	181	32	100	0.60 kg
	in.	7.13	1.26	3.94	1.32 lb
SNV-ST Ext.branch	mm	206	32	125	0.60 kg
	in.	8.11	1.26	4.92	1.32 lb
SNV-SS Ext.branch	mm	231	32	150	0.60 kg
	in.	9.09	1.26	5.91	1.32 lb

Specified weights are approximate values only.

Ordering

How to order
The table below is used to identify the valve required.

Please note that the type codes only serve to identify the valves, some of which may not form part of the standard product range. For further information please contact your local Danfoss Sales Company.

Important!
Where products need to be certified according to specific certification societies or where higher pressures are required, the relevant information should be included at the time of order.

See figure 1

SNV-ST

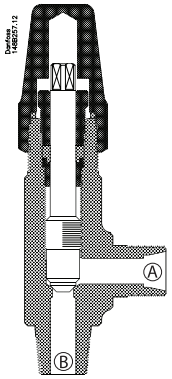

Fig. 1

SNV-ST / SNV-SS (extended branch)

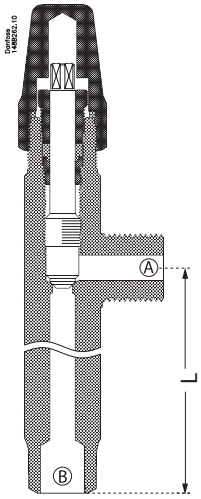

Fig. 2

SNV-ST (manometer connection)

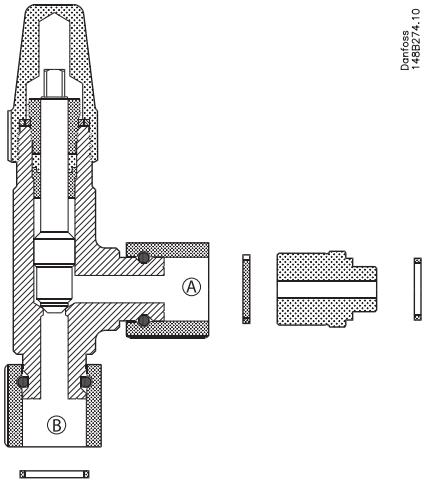

Fig. 3

Side branch connection Ⓐ	Bottom branch connection Ⓑ	Type	Quantity	Code No.
CD 10	CD 10	SNV-ST CD10-CD10	1 pc.	**148B3740**
CD 10	CD 10	SNV-ST CD10-CD10	30 pcs.	**148B4177**
CD 10	¼ MPT	SNV-ST CD10-1/4MPT	1 pc.	**148B3741**
CD 6	¼ MPT	SNV-ST CD6-1/4MPT	1 pc.	**148B3742**
CD 10	3/8 MPT	SNV-ST CD10-3/8MPT	1 pc.	**148B3743**
CD 6	3/8 MPT	SNV-ST CD6-3/8MPT	1 pc.	**148B3744**
G ½ (external)	G ½ (external)	SNV-ST G1/2-G1/2	1 pc.	**148B3745**
G ½ (external)	G ½ (external)	SNV-ST G1/2-G1/2	30 pcs.	**148B4179**
¼ FPT	¼ MPT	SNV-ST 1/4FPT-1/4MPT	1 pc.	**148B3746**
¼ FPT	¼ MPT	SNV-ST 1/4FPT-1/4MPT	30 pcs.	**148B4180**
¼ FPT	¼ MPT	SNV-SS 1/4FPT-1/4MPT	1 pc.	**148B4771**
¼ FPT	¼ MPT	SNV-ST 1/4FPT-1/4MPT**	1 pc.	**148B4772**
¼ FPT	¼ FPT	SNV-ST 1/4FPT-1/4FPT	1 pc.	**148B4568**
¼ FPT	¼ FPT	SNV-ST 1/4FPT-1/4FPT	30 pcs.	**148B4223**
3/8 FPT	3/8 MPT	SNV-ST 3/8FPT-3/8MPT	1 pc.	**148B3747**
3/8 FPT	3/8 MPT	SNV-ST 3/8FPT-3/8MPT	30 pcs.	**148B4181**
3/8 FPT	3/8 MPT	SNV-SS 3/8FPT-3/8MPT	1 pc.	**148B3750**
3/8 FPT	½ MPT	SNV-ST 3/8FPT-1/2MPT	1.pc.	**148B4565**
3/8 FPT	½ MPT	SNV-ST 3/8FPT-1/2MPT	30 pcs.	**148B4233**
3/8 FPT	3/8 FPT	SNV-ST 3/8FPT-3/8FPT	1 pc.	**148B4572**
3/8 FPT	3/8 FPT	SNV-ST 3/8FPT-3/8FPT	30 pcs.	**148B4225**
½ MPT	½ MPT	SNV-ST 1/2MPT-1/2MPT	1 pc.	**148B4564**
½ MPT	½ MPT	SNV-ST 1/2MPT-1/2MPT	30 pcs.	**148B4224**
½ MPT	3/8 FPT	SNV-ST 1/2MPT-3/8FPT	30 pcs.	**148B4226**
CD 6	¼ MPT	SNV-ST CD6-1/4MPT*	30 pcs.	**148B4216**
7/16 UNF	¼ MPT	SNV-ST 7/16UNF-1/4MPT	1 pc.	**148B4566**
7/16 UNF	¼ MPT	SNV-ST 7/16UNF-1/4MPT	30 pcs.	**148B4230**
3/8 RC	3/8 R	SNV-ST 3/8RC-3/8R	30 pcs.	**148B4227**
¼ RC	3/8 R	SNV-ST 1/4RC-3/8R	30 pcs.	**148B4228**
¼ RC	¼ R	SNV-ST 1/4RC-1/4R	30 pcs.	**148B4229**

* With handwheel
** Including adaptor for connection to ICS/PM/ICFD valve (¼ in. NPT – G¼)

© Danfoss | DCS (mwa) | 2018.11

Ordering

See figure 2
L50 = 50 mm / 2 in.
L100 = 100 mm / 4 in.
L125 = 125 mm / 5 in.
L150 = 150 mm / 6 in.

Extended Branch

Side branch connection Ⓐ	Bottom branch connection Ⓑ	Type	Quantity	Code No.
CD10	W½ L100	SNV-ST CD10-W1/2 L100	1 pc.	**148B3768**
CD10	W½ L100	SNV-ST CD10-W1/2 L100	30 pcs.	**148B4210**
G ½ (external)	W½ L50	SNV-ST G1/2-W1/2 L50	1 pc.	**148B4570**
G ½ (external)	W½ L50	SNV-ST G1/2-W1/2 L50	30 pcs.	**148B4218**
G ½ (external)	W½ L100	SNV-ST G1/2-W1/2 L100	1 pc.	**148B3769**
G ½ (external)	W½ L100	SNV-ST G1/2-W1/2 L100	30 pcs.	**148B4211**
G ½ (external)	W½ L125	SNV-ST G1/2-W1/2 L125	30 pcs.	**148B4219**
¼ FPT	¼ MPT L100	SNV-ST 1/4FPT-1/4MPT L100	1 pc.	**148B4567**
¼ FPT	¼ MPT L100	SNV-ST 1/4FPT-1/4MPT L100	30 pcs.	**148B4232**
¼ FPT	W½ L100	SNV-ST 1/4FTP-W1/2 L100	20 pcs.	**148B4495**
G ½ (external)	W½L50	SNV-SS G1/2-W1/2 L50	1 pc.	**148B4265**
G ½ (external)	W½L50	SNV-SS G1/2-W1/2 L50	30 pcs.	**148B4263**
G ½ (external)	W½L150	SNV-SS G1/2-W1/2 L150	1 pc.	**148B4266**
G ½ (external)	W½L150	SNV-SS G1/2-W1/2 L150	30 pcs.	**148B4264**

See figure 3

Manometer connection

Side branch connection	Bottom branch connection	Type	Quantity	Code No.
G ½	G ½	SNV-ST G½ Man	1 pc.	**148B3778 ****
G ½	G ½	SNV-SS G½ Man	1 pc.	**148B6545 *****

** Including adaptor for connection to ICS/PM valve (G½ - G¼)
*** Including adaptor for connection to ICF valve (G½ - G3/8).

Valves for 65 bar

Side branch connection Ⓐ	Bottom branch connection Ⓑ	Type	Quantity	Code No.
CD10	CD 10	SNV-ST CD10-CD10	1 pc.	**148B6400**
CD10	W½ L100	SNV-ST CD10-W1/2 L100	30 pcs.	**148B4223**
G ½ (external)	W½ L50	SNV-SS G1/2-W1/2 L50	1 pc.	**148B4581**
G ½ (external)	W½ L150	SNV-SS G1/2-W1/2 L150	1 pc.	**148B4582**

Accessories

Type		Connection type	Quantity	Code no.
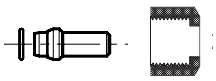	Weld nipple incl. union nut and O-ring	CD 10	1 pc.	**148B3729**
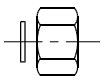	Blind nut incl. gasket	G 1/2	1 pc.	**148H3450**
	Blind nut SS incl. gasket			**148B4317**
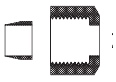	CD 6 Cutting ring + union nut	CD 6	1 pc.	**148B4182**
			60 pcs.	**148B4217**
	CD 10 Cutting ring + union nut	CD 10	1 pc.	**148B4183**
			60 pcs.	**148B4186**
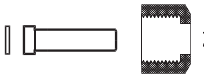	Welding nipple incl. aluminium gasket	G½-ND6	2 pcs.	**148B4184**
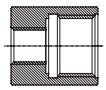	Al gaskets included	¼" FPT – ½" G	1 pc.	**148B3860**
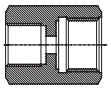	Al gaskets included	3/8" G - ½" G	1 pc.	**148B3861**
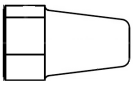	Seal cap & gasket - SNV-ST Seal cap & gasket - SNV-SS		1 pc. 1 pc.	**148B4576** **148B3269**
	Plug and gasket	G½" (external)	1 pc.	**148H3462**

ENGINEERING
TOMORROW

Shut-off valve
Type QDV

Contents

	Page
Features	129
Design	130
Technical data	130
Material specification	131
Connections	132
Dimensions	133
Ordering	133

AI183386419531en-000201 | 2016.01

ENGINEERING
TOMORROW

Shut-off valve
Type QDV

QDV is a shut-off valve, designed particularly for draining oil from systems containing refrigerant (ammonia) under pressure.

The valve will close immediately on release of the handle, thus protecting user and environment against unnecessary refrigerant leaks. The valve should as a rule be installed as illustrated in fig. 1.

In order to prevent hydraulic pressure building up between the stop valve and the QDV an integral relief device is included as part of the cone arrangement, which will open at approx. 16 bar / 232 psig.

QDV is designed to meet the safety demands specified by national and international authorities within industrial refrigeration.

Features

- Applicable to R717 (ammonia).
- Meets the safety demands within industrial refrigeration
- Handle can be positioned 360°
- Built-in integral relief device opening over 16 bar g (proventing hydraulic pressure building up between shut-off valve and QDV)
- Can be supplied together with a stop valve for quick on site mounting (fig. 1)
- Max. operating pressure: 40 bar g / 580 psi g
- Temperature range: -50 – 150 °C / -58 – 302 °F
- Classification: DNV, CRN, BV, EAC etc. To get an updated list of certification on the products please contact your local Danfoss Sales Company

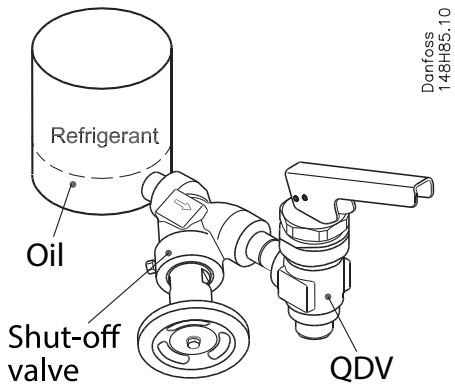

Fig. 1

Design

Connections
Available with the following connections:

- Inlet: Welding DIN (EN 10220)
  ½ in FPT
  ¾ in FPT
- Outlet: G ¾ in pipe thread (ISO 228/1)
  ½ in FPT
  ¾ in FPT

Optional extras for outlet:
- Welding nipple DIN (EN 10220)
- Hose connection

Other types of connection are available on request.

QDV - SVA combinations
Combinations of the QDV together with a dedicated SVA have been established for easy selection. Please study page 101 to find the code numbers for these combinations.

Installation
For further information refer to installation instruction for QDV.

Technical data

- Refrigerants
  Applicable to R717 (ammonia).
- QDV is a backpressure dependent valve. If any tube or hose is mounted on the outlet of the QDV it has to be calculated to prevent blackpressure building up when relieving.
- For further information please see installation instruction for QDV.
  Flammable hydrocarbons are not recommended, for further information please contact your local Danfoss Sales Company.
- Temperature range
  -50 – 150 °C / -58 – 302 °F.
- Pressure
  The valve is designed for:
  Maximum operating pressure of 40 bar g / 580 psi g

© Danfoss | DCS (mwa) | 2018.11

Material specification

QDV 15

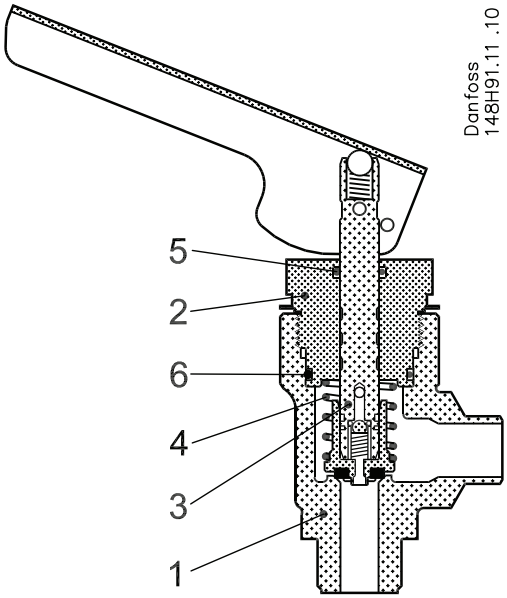

No.	Part	Material	DIN/EN	ASTM
1	Housing	Steel	G20Mn5QT EN10213-3	LCC A352
2	Bonnet	Steel St37-2	S235JR EN 10025	AISI 1015
3	Spindle / Cone	Stainless steel X10CrNiS18-9	S189 EN 10088-3	AISI 303
4	Spring	Steel		
5	O-ring	Cloroprene		
6	O-ring	Cloroprene		

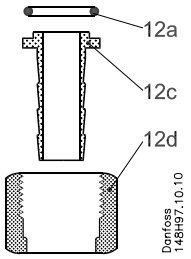

Hose connection for outlet

No.	Part	Material
12a	O-rings	Cloroprene (Neoprene)
12c	Stub for hose - OD Ø15 mm	Steel
12d	Union nut - G ¾"	Steel

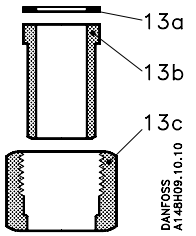

Welding nipple connection for outlet

No.	Part	Material
13a	Al-packing	Aluminium
13b	Welding nipple - OD Ø21.3 mm	Steel (S235JR)
13c	Union nut - G ¾"	Steel

Connections

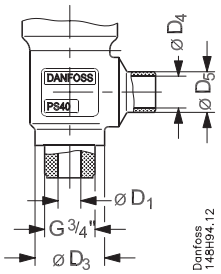

		ØD1	ØD3	ØD4	ØD5
QDV 15 DIN 15	[mm]	12	36.5	16.7	21.3
	[in]	0.47	1.44	0.66	0.84

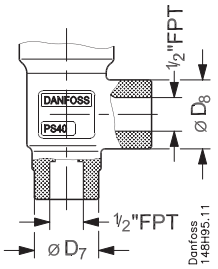

		ØD7	ØD8
QDV 15 ½" FPT	[mm]	34	36.5
	[in]	1.34	1.44

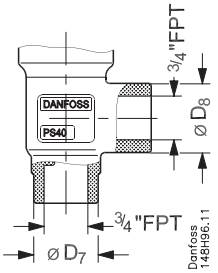

		ØD7	ØD8
QDV 15 ¾" FPT	[mm]	34	36.5
	[in]	1.34	1.44

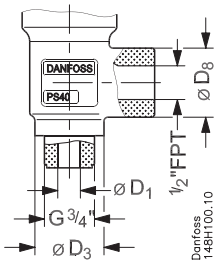

		ØD1	ØD3	ØD8
QDV 15 DIN 15	[mm]	12	36.5	34
	[in]	0.47	1.44	1.34

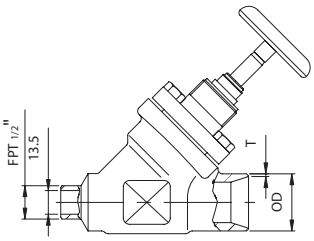

		OD	T	k_v-straight [m³/h]	C_v-straight [USgal/min]
SVA-ST DIN 15	[mm]	21.3	2.3	4.9	5.7
	[in]	0.839	0.091		

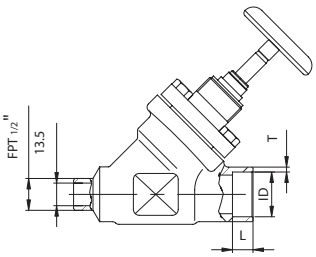

		ID	T	L	k_v-straight [m³/h]	C_v-straight [USgal/min]
SVA-ST SOC ½ in	[mm]	21.8	6.0	10	4.9	5.7
	[in]	0.858	0.235	0.39		

© Danfoss | DCS (mwa) | 2018.11

Dimensions

QDV 15 (stand alone)

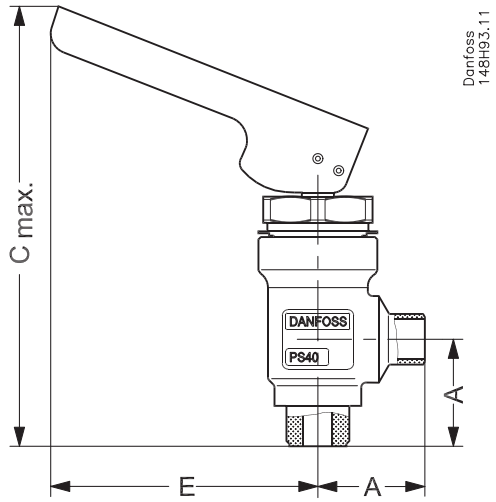

QDV 15 mounted on SVA valve

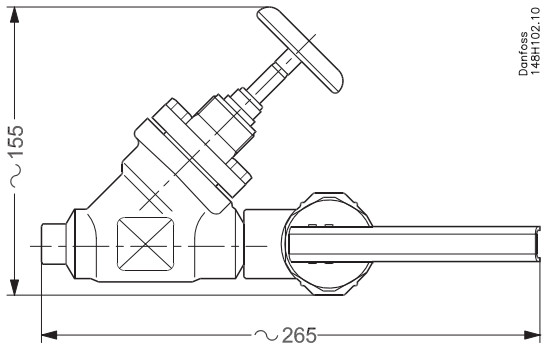

Valve size		A	C_{max}	E
QDV 15	[mm]	45	185	109
	[in]	1.77	7.28	4.29

Ordering

How to order
The table below is used to identify the valve required.

Type	Inlet	Outlet	**Code no.**
QDV 15 DN 15	DN 15	G ¾ in	**148H3272**
QDV 15 ½ in FPT	½ in FPT	½ in FPT	**148H3273**
QDV 15 $^3/_4$ in FPT	¾ in FPT	¾ in FPT	**148H3274**
QDV 15 DN 15 + SVA-ST DN 15 H-WHEEL*	DN 15	G ¾ in	**148H3310**
QDV 15 ½ in FPT + SVA-ST SOC ½ in H-WHEEL*	½ in SOC	½ in FPT	**148H3311**
Fittings for hose connection - G ¾"			**148H3451**
Fittings for welding connection - G ¾"			**148H3452**

* Two valves are supplied in one box and should be mounted on site.
The indicated inlet is for the stop valve - The indicated outlet is for the oil drain valve.

Important!
Where products need to be certified according to specific certification societies or where higher pressures are required, the relevant information should be included at the time of order.

Danfoss can accept no responsibility for possible errors in catalogues, brochures and other printed material. Danfoss reserves the right to alter its products without notice. This also applies to products already on order provided that such alterations can be made without subsequential changes being necessary in specifications already agreed.
All trademarks in this material are property of the respective companies. Danfoss and the Danfoss logotype are trademarks of Danfoss A/S. All rights reserved.

© Danfoss | DCS (mwa) | 2018.11